TOSHINE



工业输送设备样册

Industrial Conveyor System Catalog

沈阳多信铝业有限公司

Shenyang Toshine Aluminum Co., Ltd

公司简介
Company Profile

沈阳多信铝业有限公司是集研发、设计、加工制造、销售、服务于一体的综合生产型企业。公司位于东北重工业基地、东北亚经济圈和环渤海经济圈的中心辽宁省省会——沈阳，利用有利的地理优势结合本土加工优势，迅速完成铝型材模块化输送设备系统性的规划建设，旨在向各领域提供日趋完善的产品和服务。

Shenyang Toshine Aluminum Co., Ltd. is a comprehensive production enterprise integrating R&D, design, processing and manufacturing, sales and service. The company is located in Shenyang, the capital of Liaoning Province, heart of the Northeast Heavy Industry Base, Northeast Asia Economic Circle and Bohai Rim Economic Circle. It uses favorable geographical advantages combined with local processing advantages to quickly complete the systematic planning and construction of aluminum profile modular conveying equipment, aiming to provide increasingly complete products and services to various fields.



企业理念
COMPANY PHILOSOPHY

诚为本　和共兴　技至精　业竞成

Sincerity as Foundation, Prosperity through Harmony, Precision in Technology, Success through Competition.



Alibaba Gold Supplier Certification
阿里巴巴金牌企业认证



ISO Quality Management System Certification
质量管理体系认证英文



ISO Quality Management System Certification
质量管理体系认证



EU Trademark Registration Qualification
欧盟商标资质

产品简介
Product Profile

专注于为新能源、汽车零部件、3C电子、光伏、物流等自动化工业领域提供优质、全面的自动化、模块化的输送系统解决方案，满足行业对精度、速度、可靠性、稳定性等多方面的需求。

主要产品：同步带输送机、片基带输送机、倍速链输送机、摩擦滚轮输送机、皮带机、滚筒输送机、网带输送机、柔性链输送机，以及输送线配套的顶升横移、转台、提升机等相关机构和安全防护围栏、跨线梯、踏步平台等配套设施。

Focus on providing high-quality, comprehensive automated and modular conveying system solutions for new energy, auto parts, 3C electronics, photostatic, logistics and other automated industrial fields, meeting the industry's requirements for precision, speed, reliability, stability and other aspects needs.

Main products: Timing belt conveyor, ribbed belt conveyor, double speed chain conveyor, friction roller conveyor, belt conveyor, roller conveyor, mesh belt conveyor, flexible chain conveyor , as well as supporting mechanisms like lifting and transverse shifting, turntables, elevators for conveyor lines, and protective barriers system , cross-line ladders, step platforms, and other ancillary facilities.

产品简介
Product Profile

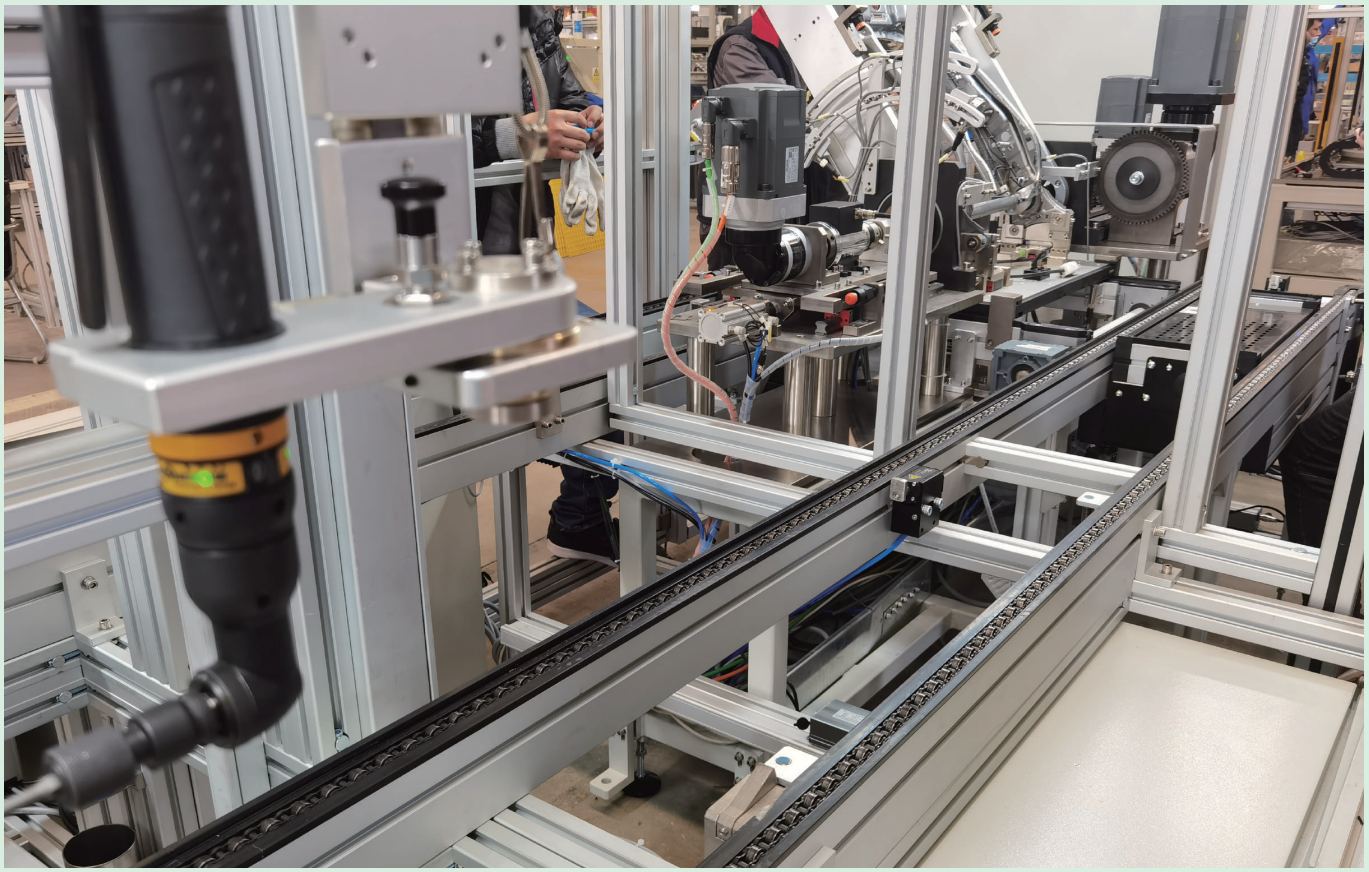

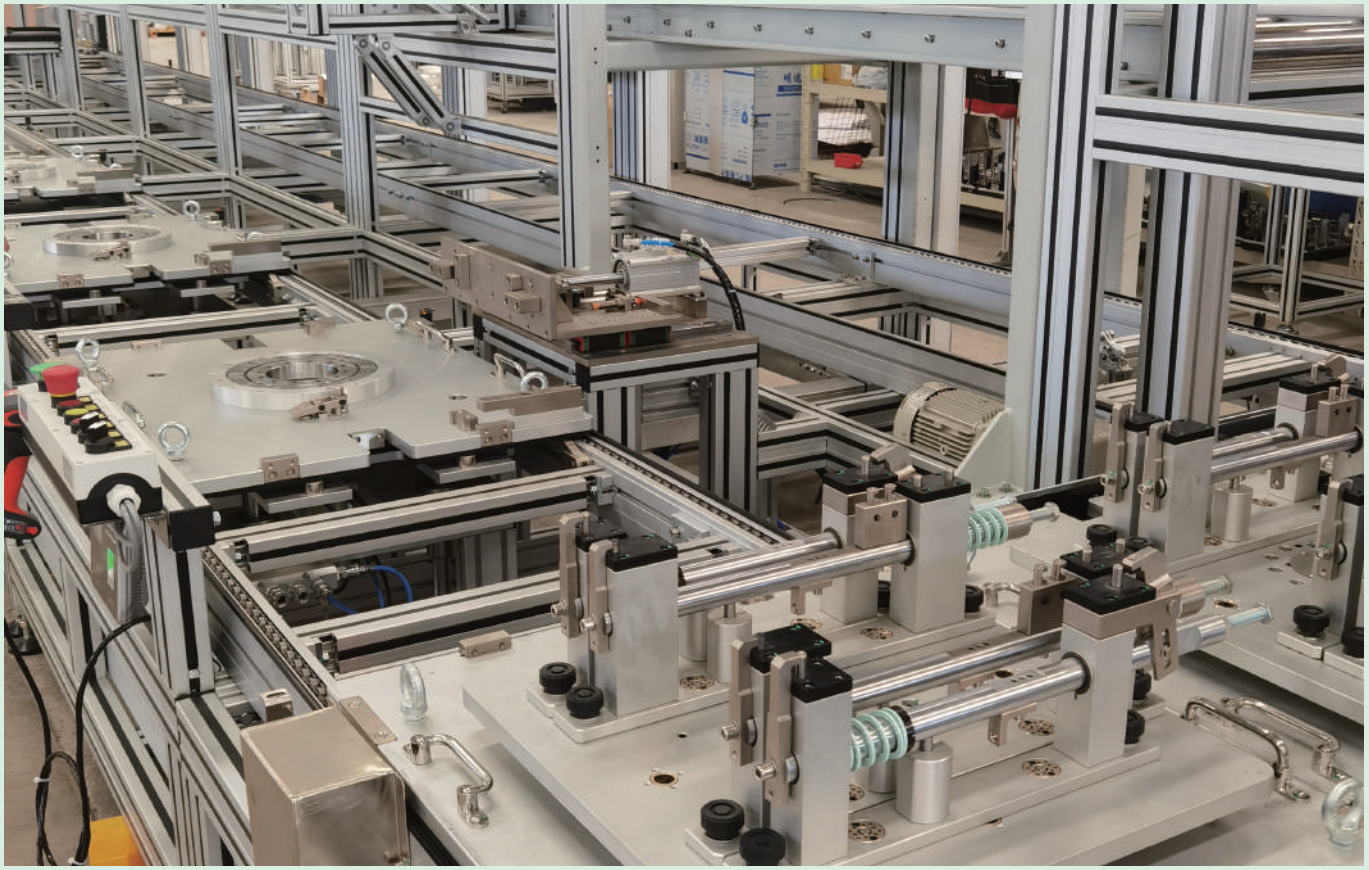

产品简介
Product Profile

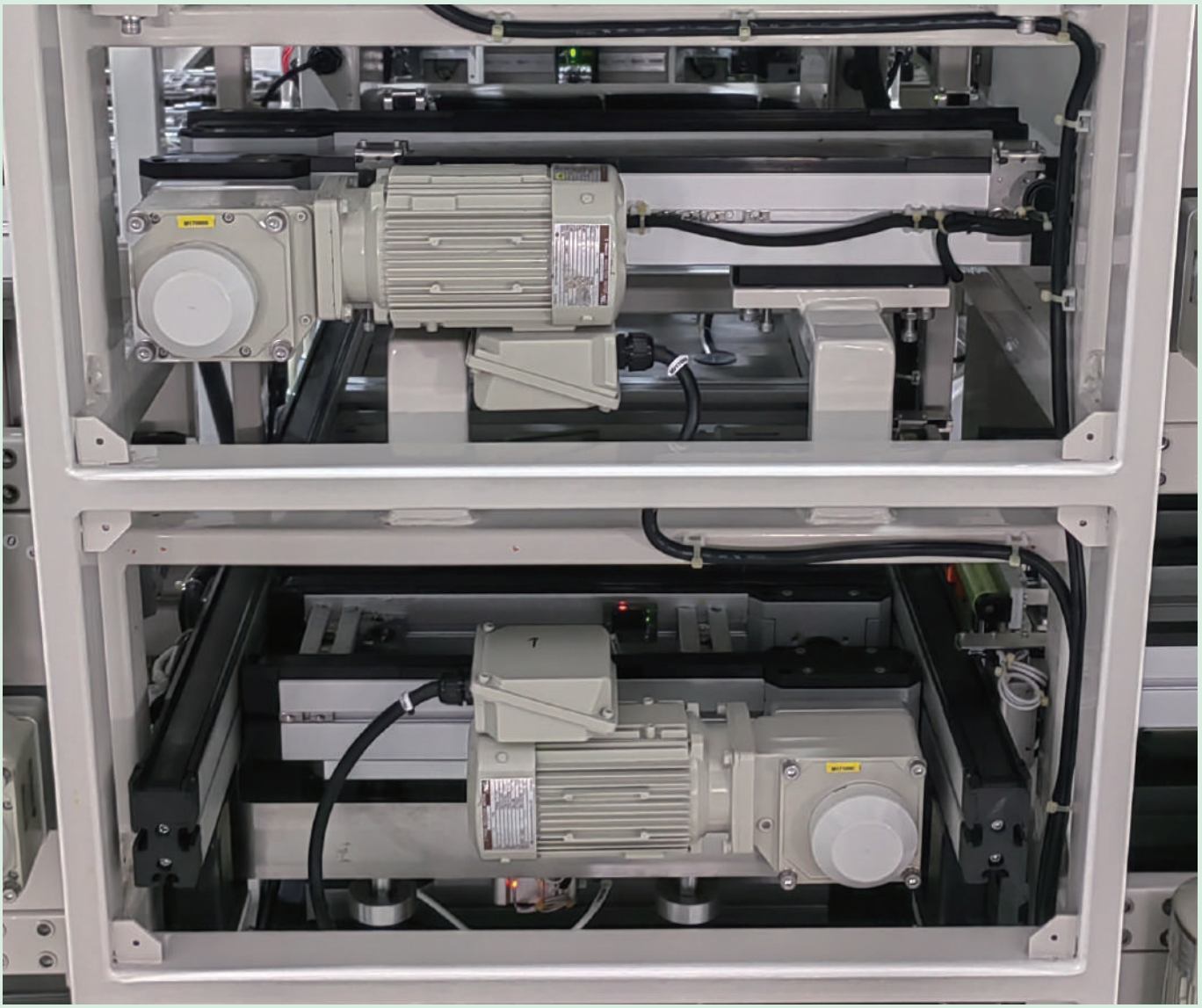



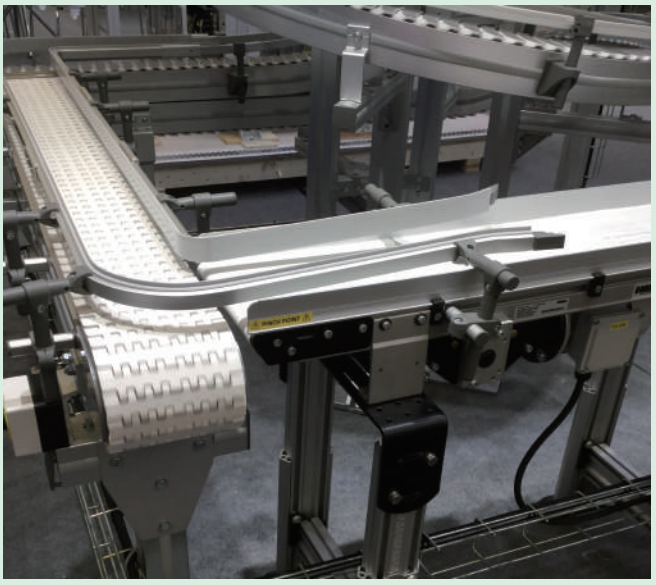

产品简介
Product Profile





产品简介
Product Profile





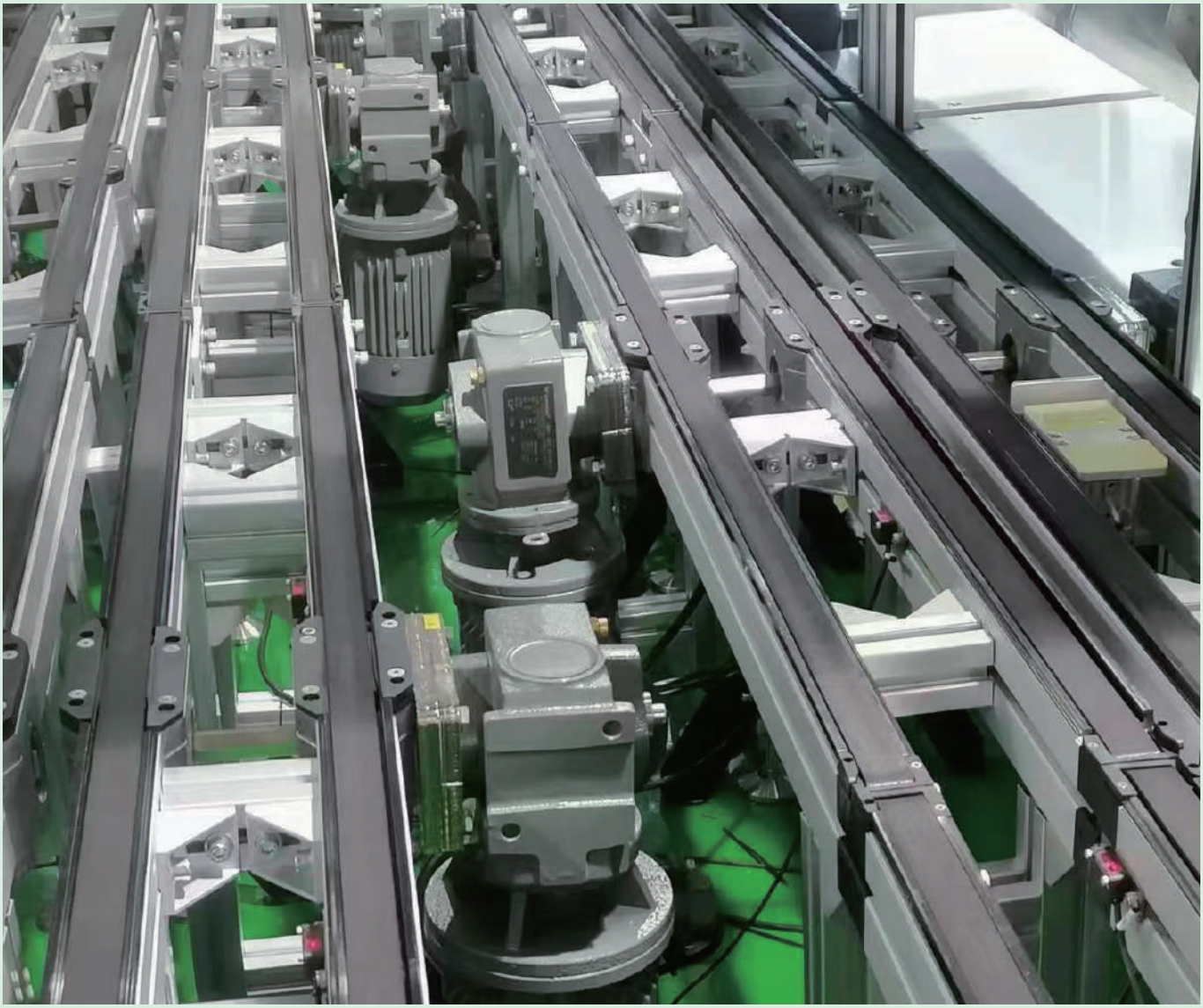

订单流程
Order Process

订单管理流程
Order Management Process

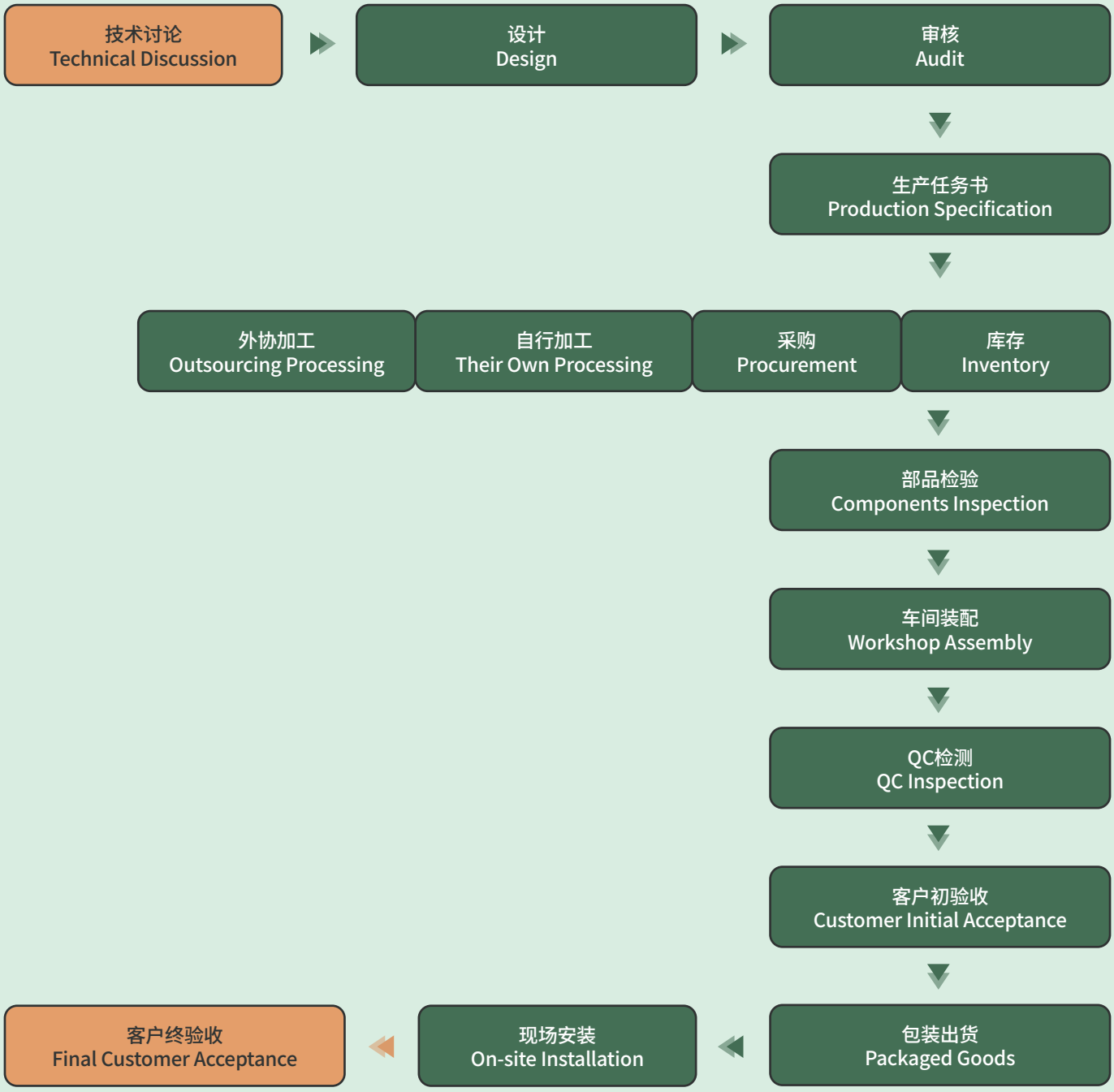

产品目录
Index

01 模块化托盘输送机 Modular Pallet Conveyor

1、TOSH-1同步带托盘输送机
TOSH-1 Synchronous Belt Pallet Conveyor ····· 09

2、TOSH-1P片基带托盘输送机
TOSH-1P PCB Belt Pallet Conveyor ····· 11

3、TOSH-2链条输送机
TOSH-2 Chain Conveyor ····· 13

4、TOSH-4链条输送机
TOSH-4 Chain Conveyor ····· 15

5、TOSH-5辊轮输送机
TOSH-5 Roller Conveyor ····· 17

02 托盘输送配套设备 Pallet Conveyor Auxiliary Equipment

1、90度强制转弯机构
90-degree Forced Curve Unit ····· 27

2、90度圆带转弯机构
90-degree Round Belt Curve Unit ····· 29

3、180度圆带转弯机构
180-degree Round Belt Curve Unit ····· 31

4、顶升横移变向输送机构
Lifting and Transverse Shifting Directional Conveying Unit ····· 33

5、顶升定位机构
Lifting Positioning Unit ····· 39

6、提升机构
Lifting Unit ····· 41

7、旋转变向机构
Rotation Shifting Directional Unit ····· 45

03 托盘 Pallet

1、TOSH-PA1托盘
TOSH-PA1 Pallet ····· 50

04 托盘输送控制元件 Pallet Conveyor Control Components

1、气动挡停器
Pneumatic Stopper ····· 57

2、气动缓冲挡停器
Pneumatic Cushioned Stopper ····· 59

3、止回器
Check Valve ····· 61

4、缓冲挡板
Buffer Stop ····· 62

05 皮带输送机 Belt Conveyors

1、TOSH-BE-30E 30系列端驱动皮带输送机
TOSH-BE-30E 30 Series End-drive Belt Conveyor ····· 65

2、TOSH-BE-30M 30系列中间驱动皮带输送机
TOSH-BE-30M 30 Series Center-drive Belt Conveyor ····· 67

3、TOSH-BE-40E 40系列端驱动皮带输送机
TOSH-BE-40E 40 Series End-drive Belt Conveyor ····· 69

4、TOSH-BE-40M 40系列中间驱动皮带输送机
TOSH-BE-40M 40 Series Center-drive Belt Conveyor ····· 71

06 辊筒输送机 Roller Conveyor

1、无动力辊筒输送机
Non-powered Roller Conveyor ····· 75

2、动力辊筒输送机
Powered Roller Conveyor ····· 77

07 链带式输送机 Belt Conveyor

1、TOSH-FC柔性链输送机
TOSH-FC Flexible Chain Conveyor ····· 81

2、TOSH-TC顶板链输送机
TOSH-TC Overhead Chain Conveyor ····· 83

3、TOSH-CB网链输送机
TOSH-CB Mesh Chain Conveyor ····· 85

01 模块化托盘输送机
Modular Pallet Conveyor

托盘输送机把托盘作为媒介物负载工件，通过输送设备的运行完成工件在不同工位间的位置变化，为满足不同的负载和生产线的需求，配置了不同的标准线体和与之配套的功能性机构。托盘输送机模块化程度高，结构简单，组装便捷，运行平稳，可靠性高，噪音低、维护方便，能够组成不同的布局，为工业自动化提供完备的基础配套设施。

The pallet conveyor utilizes pallets as carriers to transport work-pieces through the operation of the conveyor equipment, facilitating positional changes between different workstations. To meet diverse load and production line requirements, it is equipped with various standard line bodies and corresponding functional mechanisms. The modular design of the pallet conveyor ensures a high level of modularity, featuring a simple structure, easy assembly, smooth operation, high reliability, low noise, convenient maintenance, and the ability to configure different layouts. It provides comprehensive foundational facilities for industrial automation.

01 模块化托盘输送机
Modular Pallet Conveyor

模块化托盘输送系统应用展示
Demonstration of Modular Pallet Conveyor System Applications

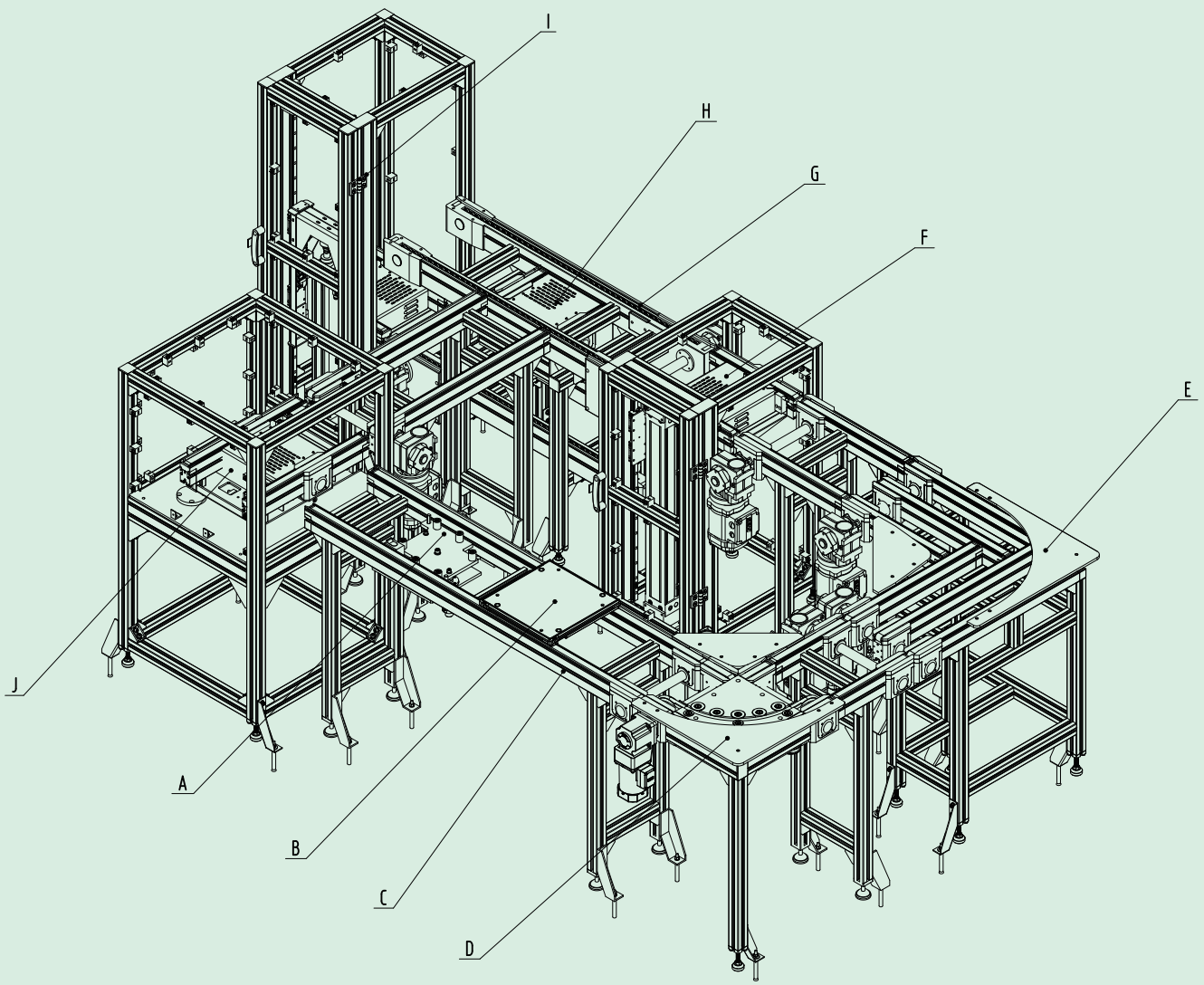

A:顶升定位
Vertical Positioning

B:托盘
Pallet

C:TOSH-1
TOSH-1

D:90°圆带转弯
90° Round Belt Turn

E:90°强制转弯
90° Forced Turn

F:无杆气缸提升机
Rodless Cylinder Lift

G:TOSH-2
TOSH-2

H:顶升横移
Lift and Transverse Shift

I:有杆气缸提升机
Rod Cylinder Lift

J:转台
Turntable

01 模块化托盘输送机
Modular Pallet Conveyor

常用生产线布局形式
Common Production Line Layouts

精准合理的布局和选型在生产线的诞生过程中起着至关重要的作用，它不仅限于满足目前的产品生产需求，对未来市场需求导致的产品变化也能调整应对，托盘输送系统，由于自己模块化的结构特点，能极大程度上解决此问题，避免社会浪费。

Precise and rational layout and selection play a crucial role in the birth of a production line. It's not just about meeting current product production needs; it also enables adjustments to future product changes caused by market demands. Pallet conveyor systems, due to their modular structural characteristics, can significantly address this issue, minimizing wastage and avoiding societal waste.

水平循环布局
Horizontal Layout

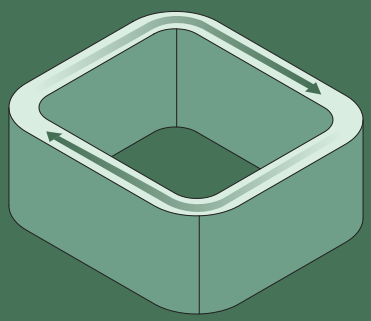

垂直循环布局
Vertical Layout

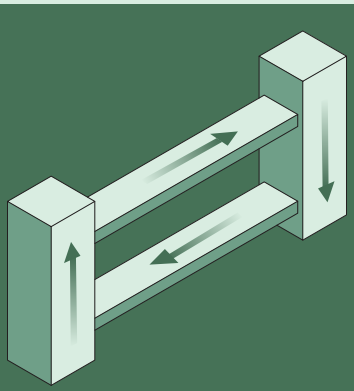

混合循环布局
Mixed Layout

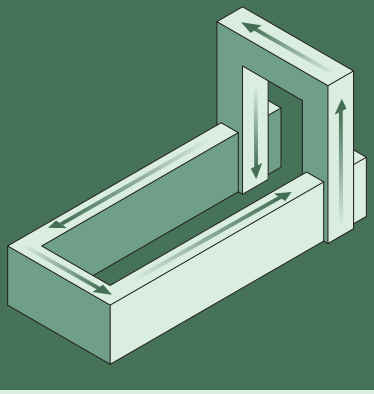

01 模块化托盘输送机
Modular Pallet Conveyor

托盘输送系统使用要求
Requirements for Pallet Conveyor Systems



气候因素

Climate factors
托盘输送系统一般应用在不受气候影响的区域
Pallet conveyor systems are typically used in climate-indepent areas.



工作温度

Working temperature
+5至+40°C
+5~+40°C
此条件范围外会影响设备的负责能力及使用寿命
Exceeding this condition affects the responsibility and service life of the equipment.



存储温度

Storage temperature
-5C至+50°C
-5°C~+50°C
请尽量常规室温储存
Please store at room temperature as often as possible



空气压力

Air pressure
>84 kPa, 相应的海拔高度 <1400 m, 当系统安装在海拔高于 1400 m 时, 负载值降低 15 %。
>84 kPa, corresponding altitude < 1400 m. When the system is installed above 1400 m the load value decreases by 15%.



相对湿度

Relative humidity
5至85%, 没有冷凝
5 ~ 85%non-condensing
1至2%(干燥室), 根据客户要求
1~2% according to customers' requirements
此条件范围外会影响设备的负责能力及使用寿命
Exceeding this condition affects the responsibility and service life of the equipment.



化学因素

Chemical factors
不要用于有化学物质排放的有接触可能性的环境中。
Do not use in an environment where there is a potentialfor exposure from chemical releases.
此条件范围外会影响设备的负责能力及使用寿命
Exceeding this condition affects the responsibility and service life of the equipment.



物理因素

Physical factors
不要用于近切屑、沙尘的地方, 也不要用于有大的震动及冲击力的环境中。
Do not use near chips, sand or dust, and do not use in environments with large vibrations and shocks

01 模块化托盘输送机
Modular Pallet Conveyor

输送介质承载力参数
Load-Bearing Capacity Parameters of Conveying Media

不同的机型，传输介质不同，传输介质不同导致最终的最大负载能力不同

Different machine models utilize different conveying media, leading to varying maximum load-bearing capacities.

Conveyor medium 输送介质	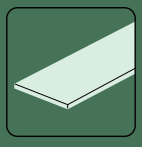 皮带 Belt	 齿形带 Toothed belt	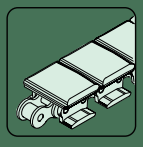 平顶链 Flat top chain	 积放滚子链(尼龙) Accumulation roller chain(PA)	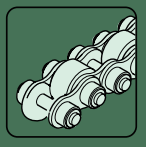 积放滚子链(钢制) Accumulation roller chain(ST)
Unit loading capacity 单位承载能力				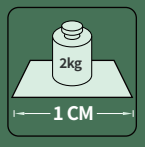	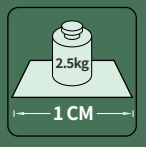

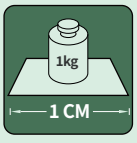

特定输送段负载/cm=工件托盘总重量/支承长度

Specific conveying section load/cm= Total weight of pallet / Length of support

最大允许分段载荷

Maximum permissible section load

Σma = 分段载荷

Σma = Segment load

在选择机型或者计算输送能力时，同时累积在有效长度范围内的总负载要小于该长度输送介质允许的最大负载，反之则视为选型不合理，或超出输送能力范围。

When selecting a model or calculating the conveying capacity, the total load accumulated within the effective length range must be smaller than the maximum load allowed by the conveying medium for that length. Conversely, if it exceeds this limit, it is considered an inappropriate selection or exceeds the conveying capacity range.

01 模块化托盘输送机
Modular Pallet Conveyor

选型参考
Selection Reference

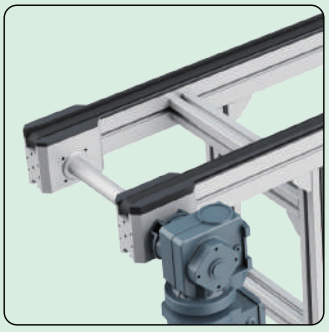

TOSH-1:适用于场地范围小、洁净度高、自动化程度高的生产线，主要用于质量小、体积小的产品输送，如电子行业、小家电、汽车零部件等。

TOSH-1: Suitable for small-sized areas with high cleanliness and a high level of automation in production lines. Primarily used for conveying small-sized and low-volume products, such as in the electronics industry, small household appliances, and automotive components.

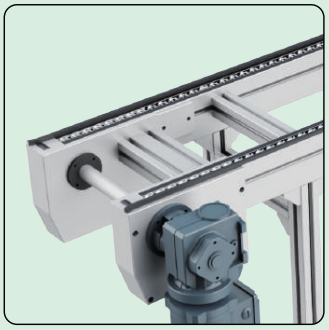

TOSH-2：适用范围广，输送能力强，主要针对中度负载，可广泛用于家电、汽车及发动机零部件的生产组装等。

TOSH-2: Versatile and high-capacity, designed for moderate loads. Widely applicable in assembling production lines for household appliances, automobiles, and engine components.

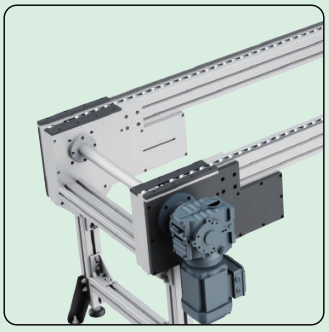

TOSH-4：适用于中大负载，输送距离长的生产线，同样用于汽车零部件，家电、电子等行业。

TOSH-4: Suitable for medium to large loads and long-distance conveyance in production lines. Similarly used in industries like automotive components, household appliances, and electronics.

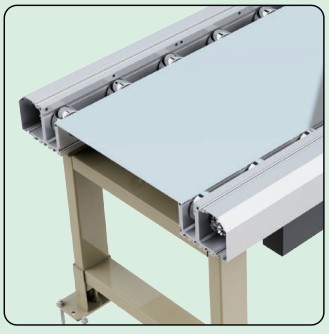

TOSH-5:主要用于大负载场景，结构坚固，能承受较大的冲击载荷，多用于汽车发动机、变速器等自动装配生产线。

TOSH-5: Mainly employed in scenarios with heavy loads, featuring a robust structure capable of withstanding significant impact loads. Often utilized in automatic assembly production lines for automotive engines and transmissions.

01 模块化托盘输送机
Modular Pallet Conveyor

电机安装位置：
Motor Mounting Positions:

根据生产线结构、空间不同，电机可根据需求布置在不同的位置，具体参考下图，如有特殊需求请致电我司。

Based on the production line structure and space availability, the motor can be arranged in different locations as needed. Please refer to the diagram below, and for specific requirements, please contact our company.

电机位置OP/IP,IS/OS **Motor Positions OP/IP,IS/OS**	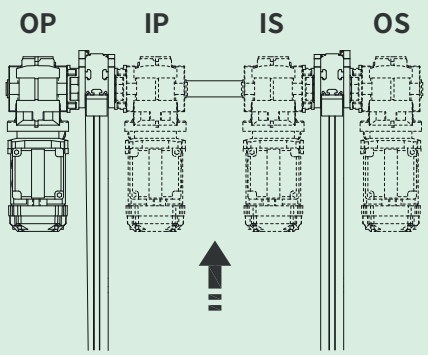
电机方向：F1/F2/F3/F4 **Motor Directions: F1/F2/F3/F4**	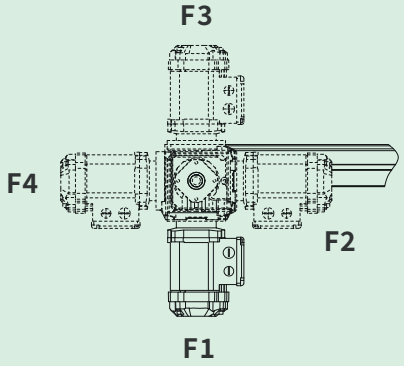

图示电机接线盒方向为默认方向，如需其他方向请提前与我司联系。

The default direction for the motor terminal box is as shown in the diagram. Please contact our company in advance if you require a different direction.

01 模块化托盘输送机
Modular Pallet Conveyor

1、TOSH-1同步带输送机
TOSH-1 Synchronous Belt Conveyor

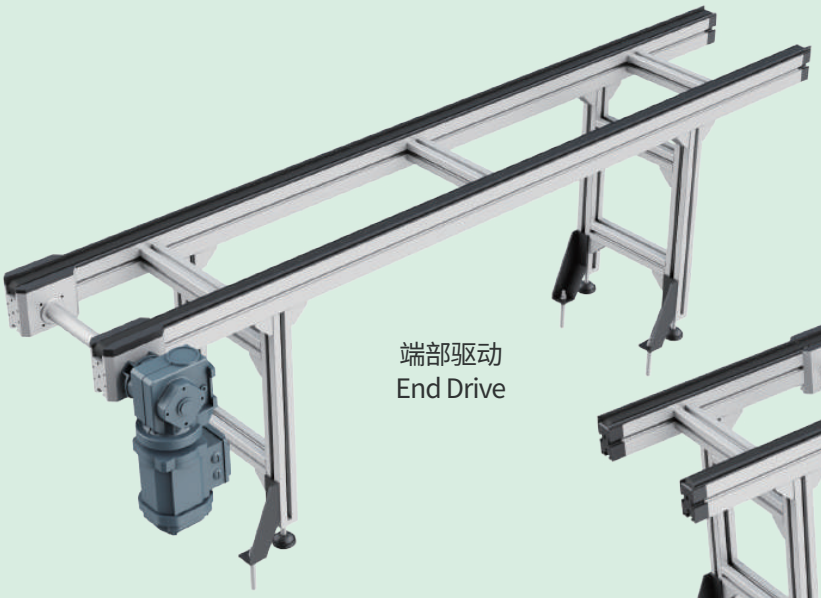

端部驱动
End Drive

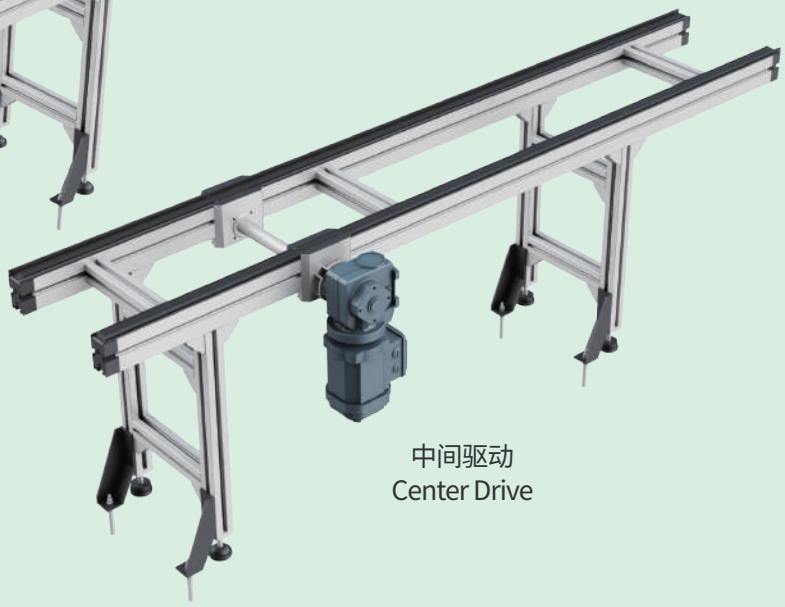

中间驱动
Center Drive

规格参数：
Specifications

型号T Model	线体长度L Conveyor Length	托盘宽度B Pallet Width	输送面高度H Conveying Height	运行速度V Conveyor Speed	电机位置 Motor Position	电机方向 Motor Direction
TOSH-1	400~6000mm	160~1200mm	按需 As Needed	最大20m/min Max 20m/min	详见P7页 Refer to Page 7	详见P7页 Refer to Page 7

选型示例：
Example of Selection

①型号 Model		②线体长度L Conveyor Length		③托盘宽度B Pallet Width		④输送面高度H Conveying Height		⑤运行速度V Conveyor Speed		⑥电机位置 Motor Position		⑦电机方向 Motor Direction
TOSH-1	–	L2340	–	W320	–	H900	–	V12	–	OP	–	F1

01 模块化托盘输送机
Modular Pallet Conveyor

产品特点：
Product Features

- 模块化程度高，配套机构完备，方便维护；
  High modularity, comprehensive supporting mechanisms, easy to maintain;
- 线体采用高强度铝型材，与标准型材及配件可任意组装连接，方便使用；
  The line body adopts high-strength aluminum profiles, freely assembled and connected with standard profiles and accessories, easy to use;
- 驱动形式有端驱动和中间驱动两种，根据需求选配；
  There are two types of drive: end drive and center drive, which can be selected according to needs.
- 最大负载能力为60KG;
  Maximum load capacity is 60KG;
- 适用于堆积输送；
  Suitable for accumulation conveying;
- 可反向输送，输送能力与正向比较降低1/3,不推荐使用；
  Can run in reverse, with a 1/3 decrease in conveying capacity compared to forward movement, not recommended for use;
- 额定速度内运行，线体噪音≤60dB。
  Operates within the rated speed, line body noise ≤60dB.

尺寸说明：
Dimensional Description

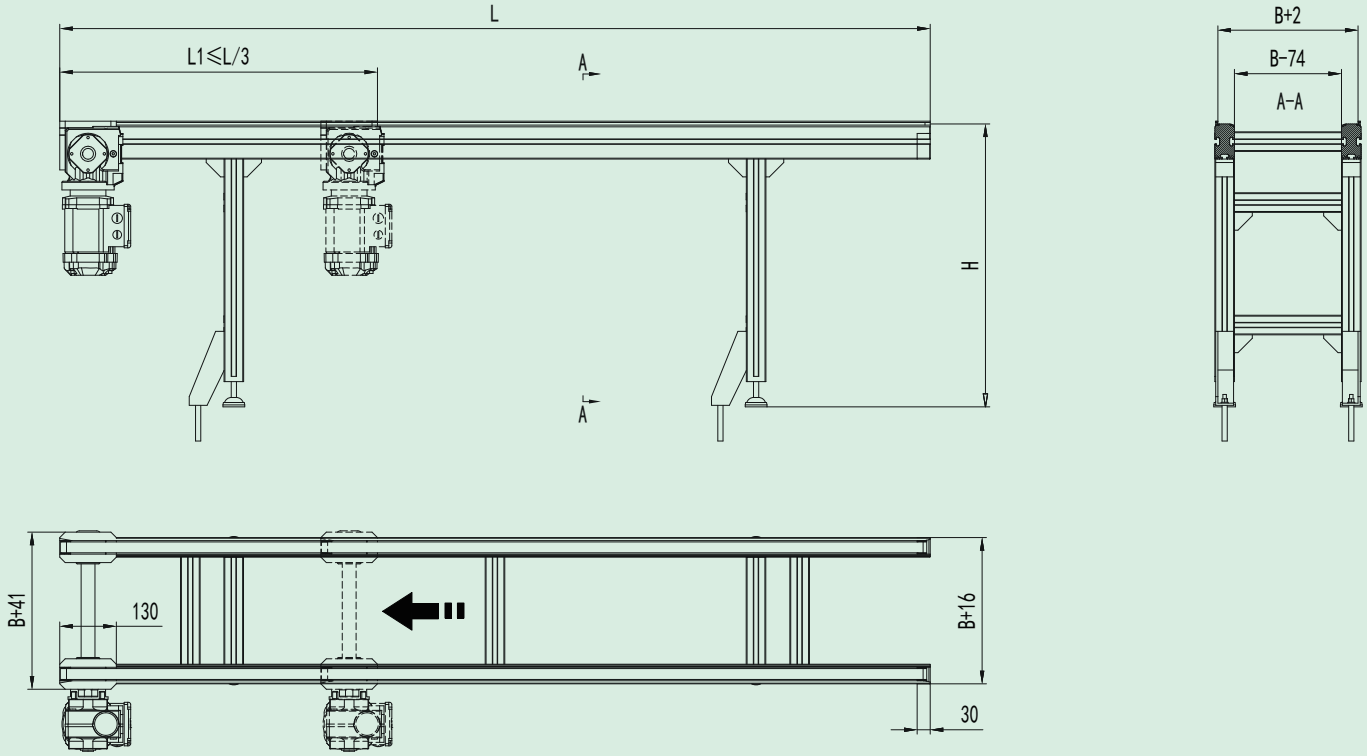

01 模块化托盘输送机
Modular Pallet Conveyor

2、TOSH-1P片基带输送机
TOSH-1P Ribbed Belt Conveyor

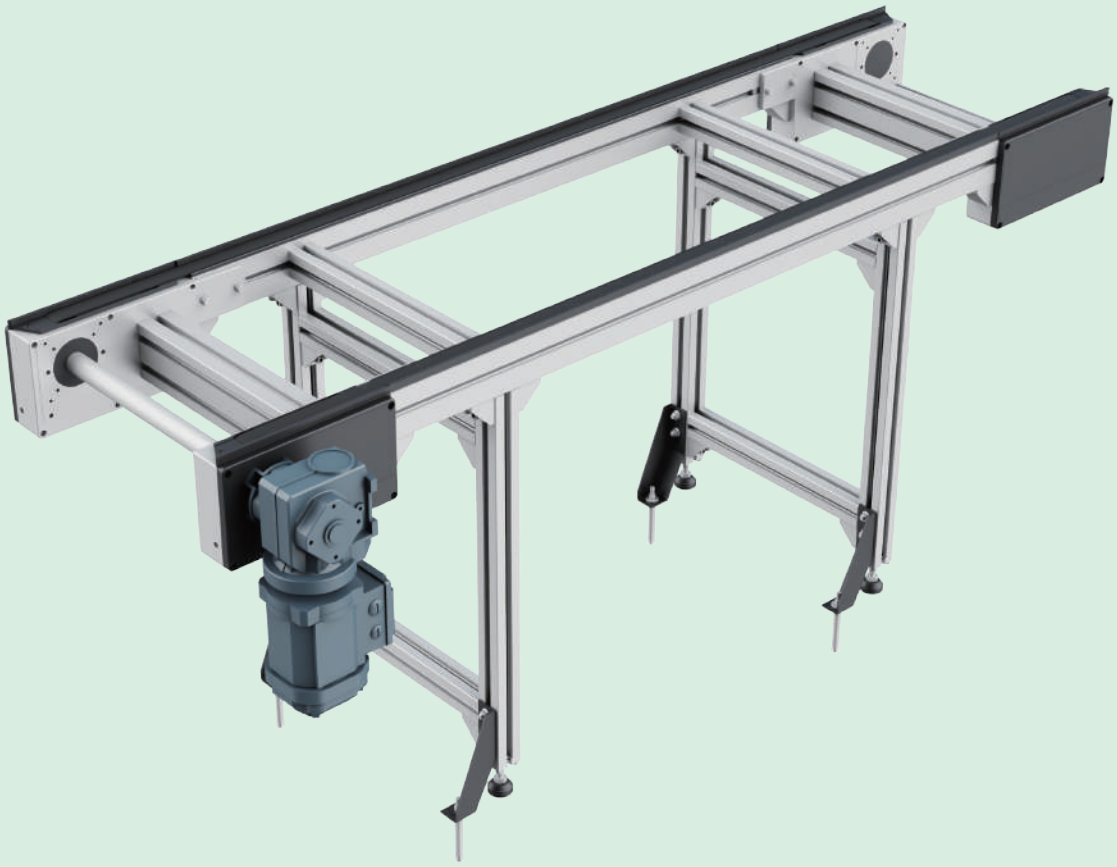

规格参数：
Specifications

型号T Model	线体长度L Conveyor Length	托盘宽度B Pallet Width	输送面高度H Conveying Height	运行速度V Conveyor Speed	电机位置 Motor Position	电机方向 Motor Direction
TOSH-1P	1200~12000mm	160~1200mm	按需 As Needed	最大20m/min Max 20m/min	详见P7页 Refer to Page 7	详见P7页 Refer to Page 7

选型示例：
Example of Selection

①型号 Model		②线体长度L Conveyor Length		③托盘宽度B Pallet Width		④输送宽度W Conveying Width		⑤运行速度V Conveyor Speed		⑥电机位置 Motor Position		⑦电机方向 Motor Direction
TOSH-1P	–	L3500	–	W320	–	H900	–	V12	–	IS	–	F2

01 模块化托盘输送机
Modular Pallet Conveyor

产品特点：
Product Features

- 模块化程度高，配套机构完备，方便维护；
  High modularity, comprehensive supporting mechanisms, easy to maintain；
- 线体采用高强度铝型材，与标准型材及配件可任意组装连接，方便使用；
  The line body adopts high-strength aluminum profiles, freely assembled and connected with standard profiles and accessories, convenient to use；
- 最大负载能力为150KG；
  Maximum load capacity is 150KG；
- 适用于堆积输送;
  Suitable for accumulation conveying；
- 禁止反向输送；
  Prohibited for reverse conveying；
- 额定速度内运行，线体噪音≤60dB。
  Operates within the rated speed, line body noise ≤60dB.

尺寸说明：
Dimensional Description

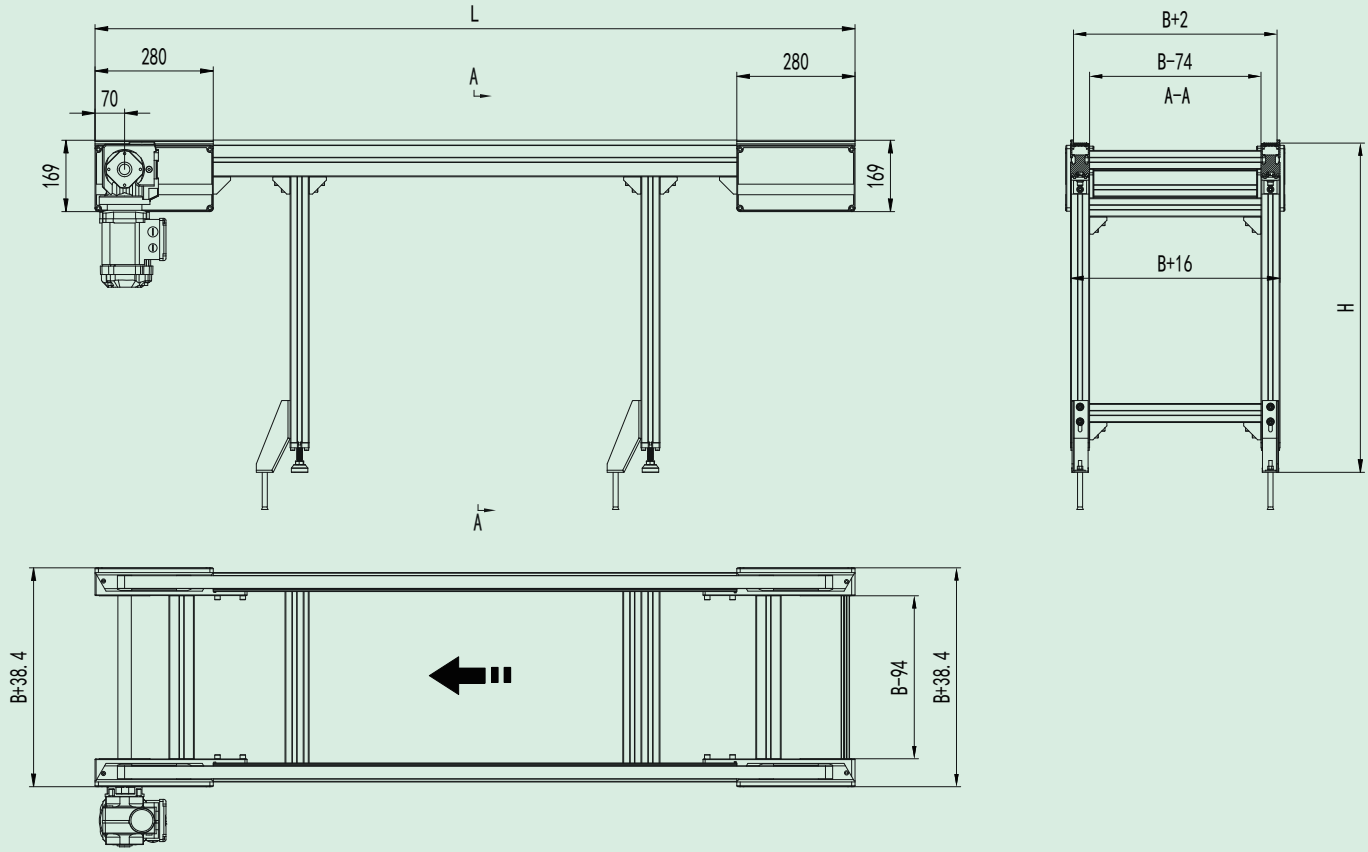

01 模块化托盘输送机
Modular Pallet Conveyor

3、TOSH-2 链条(08BS)输送机
TOSH-2 Chain (08BS) Conveyor

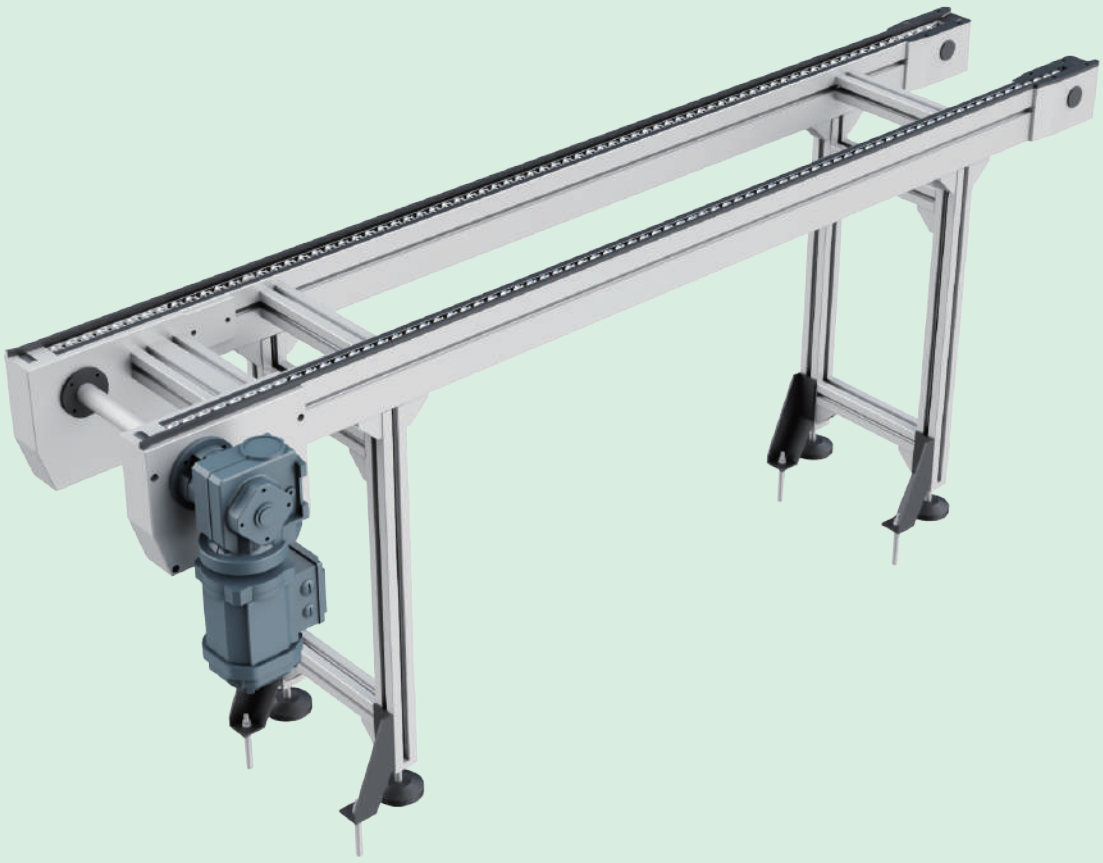

规格参数:
Specifications

型号T Model	线体长度L Conveyor Length	托盘宽度B Pallet Width	输送面高度H Conveying Height	运行速度V Conveyor Speed	电机位置 Motor Position	电机方向 Motor Direction
TOSH-2	600~12000mm	160~1200mm	按需 As Needed	最大20m/min Max 20m/min	详见P7页 Refer to Page 7	详见P7页 Refer to Page 7

选型示例:
Example of Selection

①型号 Model		②线体长度L Conveyor Length		③托盘宽度B Pallet Width		④输送宽度W Conveying Width		⑤运行速度V Conveyor Speed		⑥电机位置 Motor Position		⑦电机方向 Motor Direction
TOSH-2	–	L4000	–	W320	–	H950	–	V10	–	IS	–	F2

01 模块化托盘输送机
Modular Pallet Conveyor

产品特点：
Product Features

- 模块化程度高，配套机构完备，方便维护；
  High modularity, complete supporting mechanisms, easy maintenance;
- 线体采用高强度铝型材，与标准型材及配件可任意组装连接，方便使用；
  The line body adopts high-strength aluminum profiles, freely connectable with standard profiles and accessories, convenient to use;
- 最大负载能力为2200KG；
  Maximum load capacity of 2200KG;
- 适用于堆积输送；
  Suitable for accumulation conveying;
- 链条种类：钢制轮链条、尼龙轮链条、免维护镀镍链条、带防护盖链条；
  Chain types: Steel Wheel Chain, Nylon Wheel Chain, Maintenance-free Nickel-plated Chain, Chain with Protective Cover;
- 禁止反向输送，输送能力与正向比较降低1/3,不推荐使用；
  Prohibited for reverse conveying, with a 1/3 decrease in conveying capacity compared to forward movement, not recommended for use;
- 额定速度内运行，线体噪音≤70dB。
  Operates within the rated speed, line body noise ≤70dB.

尺寸说明：
Dimensional Description

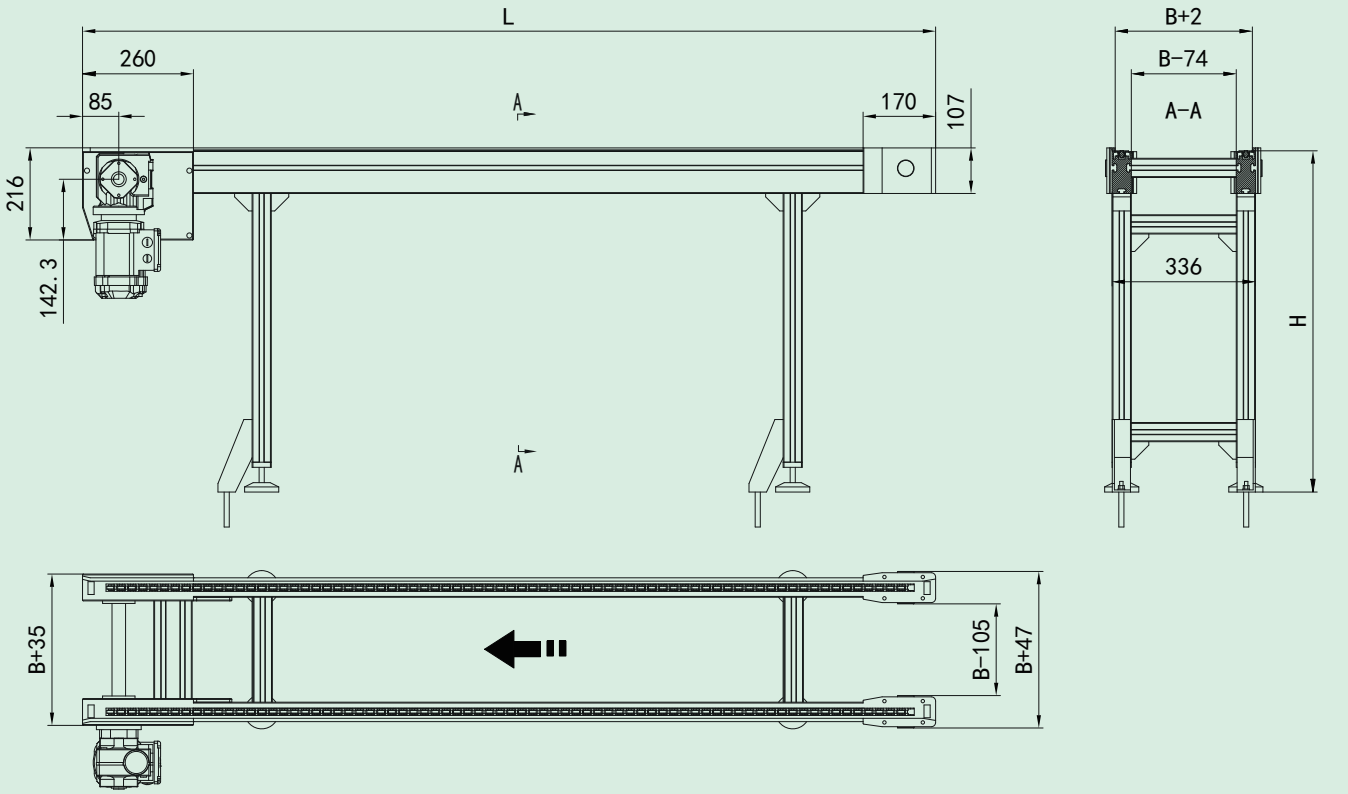

01 模块化托盘输送机
Modular Pallet Conveyor

4、TOSH-4链条(12BS)输送机
TOSH-4 Chain(12BS) Conveyor

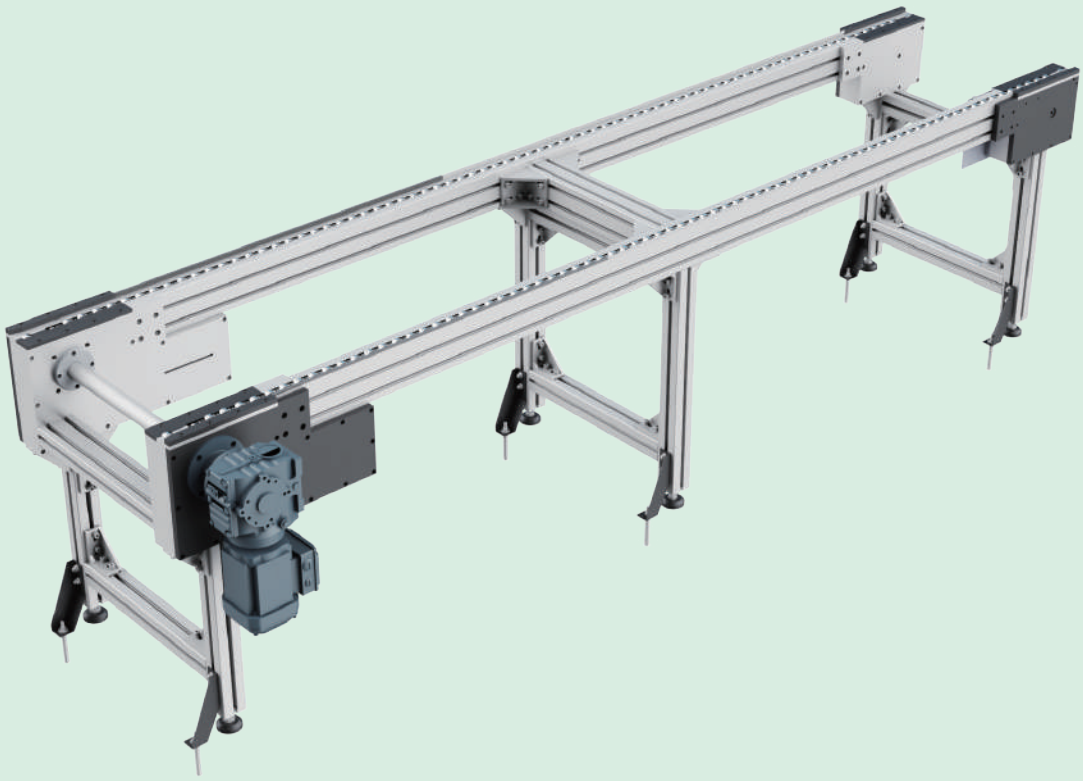

规格参数：
Specifications

型号T Model	线体长度L Conveyor Length	托盘宽度B Pallet Width	输送面高度H Conveying Height	运行速度V Conveyor Speed	电机位置 Motor Position	电机方向 Motor Direction
TOSH-4	1000~20000mm	400~1600mm	按需 As Needed	最大20m/min Max 20m/min	详见P7页 Refer to Page 7	详见P7页 Refer to Page 7

选型示例：
Example of Selection

①型号 Model		②线体长度L Conveyor Length		③托盘宽度B Pallet Width		④输送宽度W Conveying Width		⑤运行速度V Conveyor Speed		⑥电机位置 Motor Position		⑦电机方向 Motor Direction
TOSH-4	–	L7000	–	W600	–	H600	–	V8	–	OS	–	F2

01 模块化托盘输送机
Modular Pallet Conveyor

产品特点：
Product Features

- 适合重载托盘模块化程度高，配套机构完备，方便维护；
  Suitable for heavy-duty pallets, high modularity, comprehensive supporting mechanisms, easy maintenance;
- 线体采用高强度铝型材，与标准型材及配件可任意组装连接，方便使用；
  The line body adopts high-strength aluminum profiles, freely assembled and connected with standard profiles and accessories, convenient to use;
- 传输介质为12BS积放链条；
  Conveying medium: 12BS accumulation Chain;
- 最大负载能力为2500KG；
  Maximum load capacity of 2500KG;
- 适用于堆积输送；
  Suitable for accumulation conveying;
- 禁止反向输送；
  Prohibited for reverse conveying;
- 额定速度内运行，线体噪音≤70dB。
  Operates within the rated speed, line body noise ≤70dB.

尺寸说明：
Dimensional Description

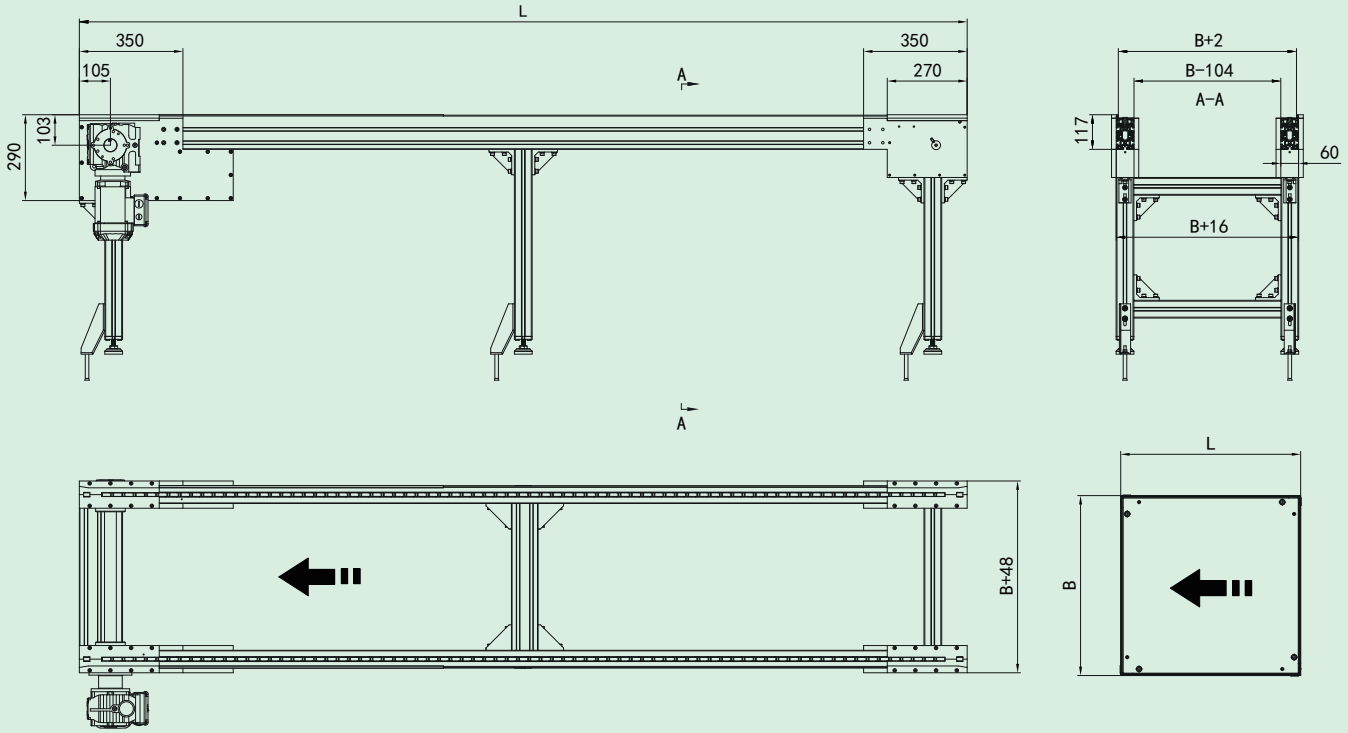

01 模块化托盘输送机
Modular Pallet Conveyor

5、TOSH-5辊轮输送机
TOSH-5 Roller Conveyor

5.1、TOSH-5-CC 双侧链条传动悬臂式辊轮输送机
TOSH-5-CC Double-Sided Chain-Driven Cantilever Roller Conveyor

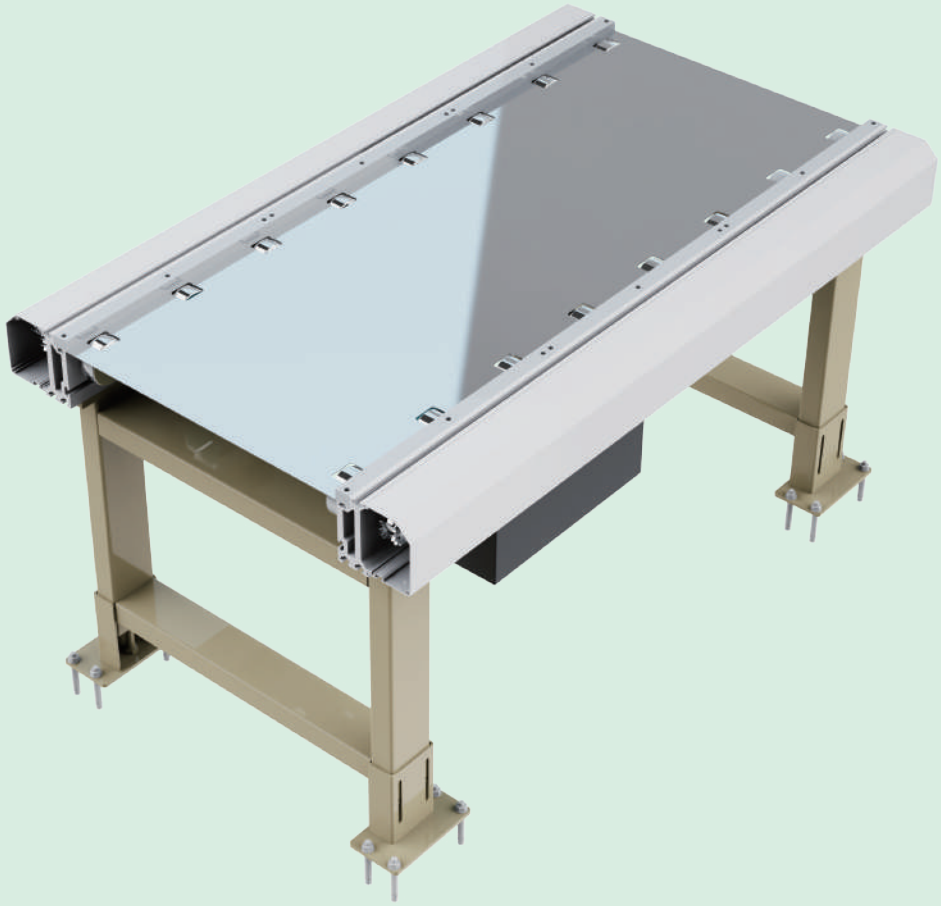

规格参数：
Specifications

型号T Model	线体长度L Conveyor Length	托盘宽度B Pallet Width	输送面高度H Conveying Height	运行速度V Conveyor Speed	辊轮间距P Roller Spacing
TOSH-5-CC	1000~6000mm	300~1200mm	按需 As Needed	最大15m/min Max 15m/min	158/197/247mm

选型示例：
Example of Selection

①型号 Model		②线体长度L Conveyor Length		③托盘宽度B Pallet Width		④输送宽度W Conveying Width		⑤运行速度V Conveyor Speed		⑥辊轮间距P Roller Spacing
TOSH-5-CC	–	L3000	–	W700	–	H600	–	V9	–	P158

01 模块化托盘输送机
Modular Pallet Conveyor

产品特点：
Product Features

- 模块化程度高，配套机构完备，方便维护；
  High modularity, comprehensive supporting mechanisms, easy maintenance;
- 输送介质为辊轮；
  Conveying medium is rollers;
- 线体边框为专用高强度铝型材，标准段对接使用，双侧悬臂式结构，链条传动；
  The line body frame is made of special high-strength aluminum profiles, standardized sections for connection, double-sided cantilever structure, chain drive;
- 适合重载托盘输送，可实现托盘的自动循环和柔性控制；
  Suitable for heavy-duty pallet conveying, capable of automatic circulation and flexible control of pallets;
- 总负载小于2000KG；
  Total load less than 2000KG;
- 适用于堆积输送。
  Suitable for accumulation conveying.

尺寸说明：
Dimensional Description

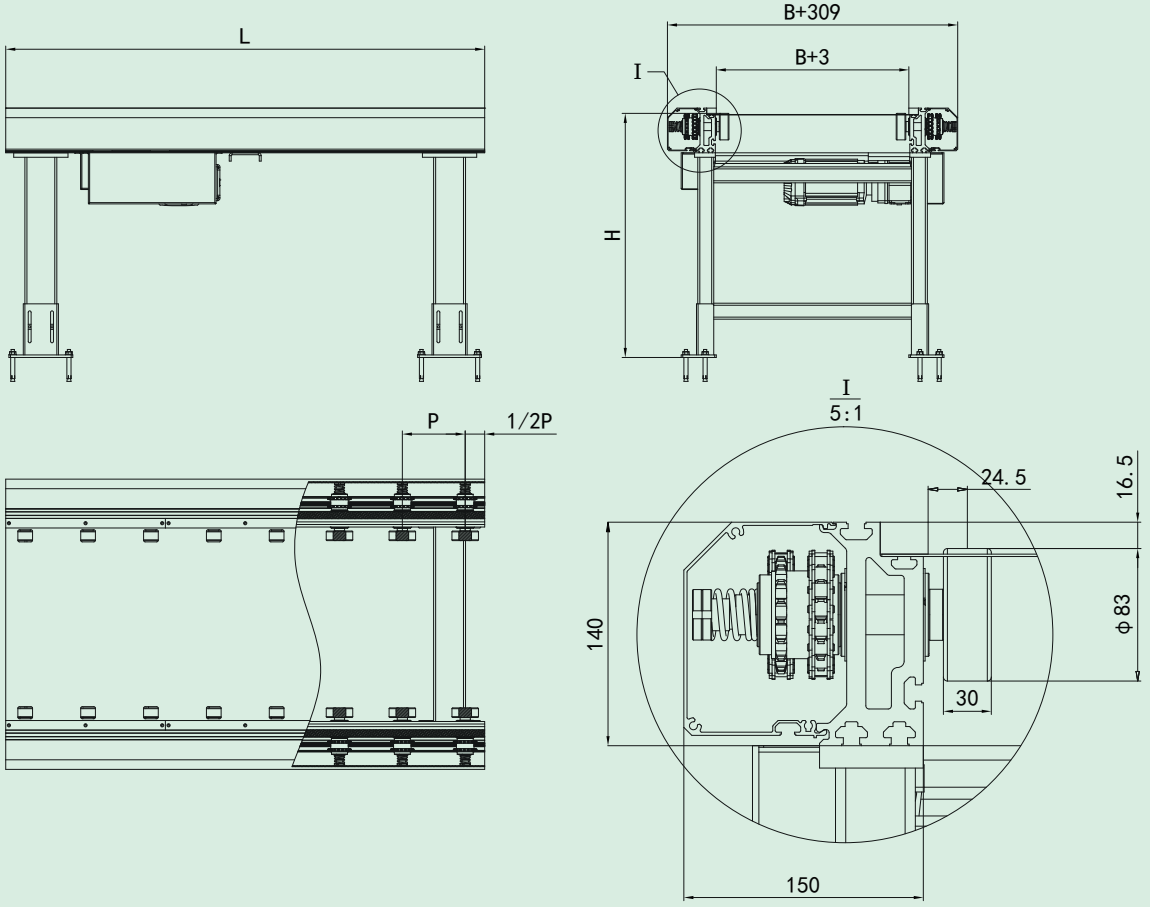

01 模块化托盘输送机
Modular Pallet Conveyor

5.2、TOSH-5-GC 双侧锥齿轮传动悬臂式辊轮输送机
TOSH-5-GC Bilateral Helical Gear Drive Cantilever Roller Conveyor

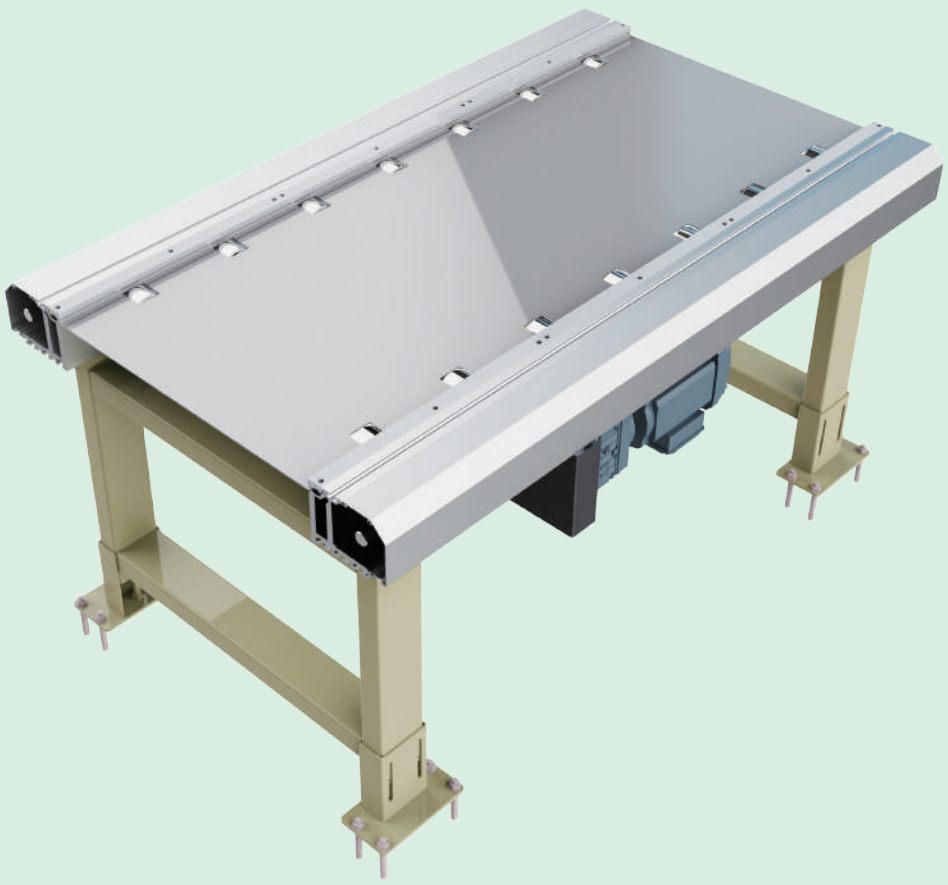

规格参数：
Specifications

型号T Model	线体长度L Conveyor Length	托盘宽度B Pallet Width	输送面高度H Conveying Height	运行速度V Conveyor Speed	辊轮间距P Roller Spacing
TOSH-5-GC	1000-6000mm	300~1200mm	按需 As Needed	3~15m/min	160/200/250mm

选型示例：
Example of Selection

①型号 Model		②线体长度L Conveyor Length		③托盘宽度B Pallet Width		④输送宽度W Conveying Width		⑤运行速度V Conveyor Speed		⑥辊轮间距P Roller Spacing
TOSH-5-GC	–	L4000	–	W600	–	H500	–	V9	–	P200

01 模块化托盘输送机
Modular Pallet Conveyor

产品特点：
Product Features

- 模块化程度高，配套机构完备，方便维护；
  High modularity with comprehensive supporting mechanisms, facilitating maintenance;
- 输送介质为辊轮；
  Conveying medium is rollers;
- 线体边框为专用高强度铝型材，标准段对接使用，双侧悬臂式结构，锥齿轮传动；
  Frame of the line is made of specialized high-strength aluminum profiles, using standardized sections for connection, featuring a double-sided cantilever structure and bevel gear transmission;
- 适合重载托盘输送，可实现托盘的自动循环和柔性控制；
  Suitable for heavy-duty pallet conveying, capable of automatic cycling and flexible control of pallets;
- 总负载小于2500KG；
  Total load less than 2500KG;
- 适用于堆积输送。
  Applicable for accumulation conveying.

尺寸说明：
Dimensional Description

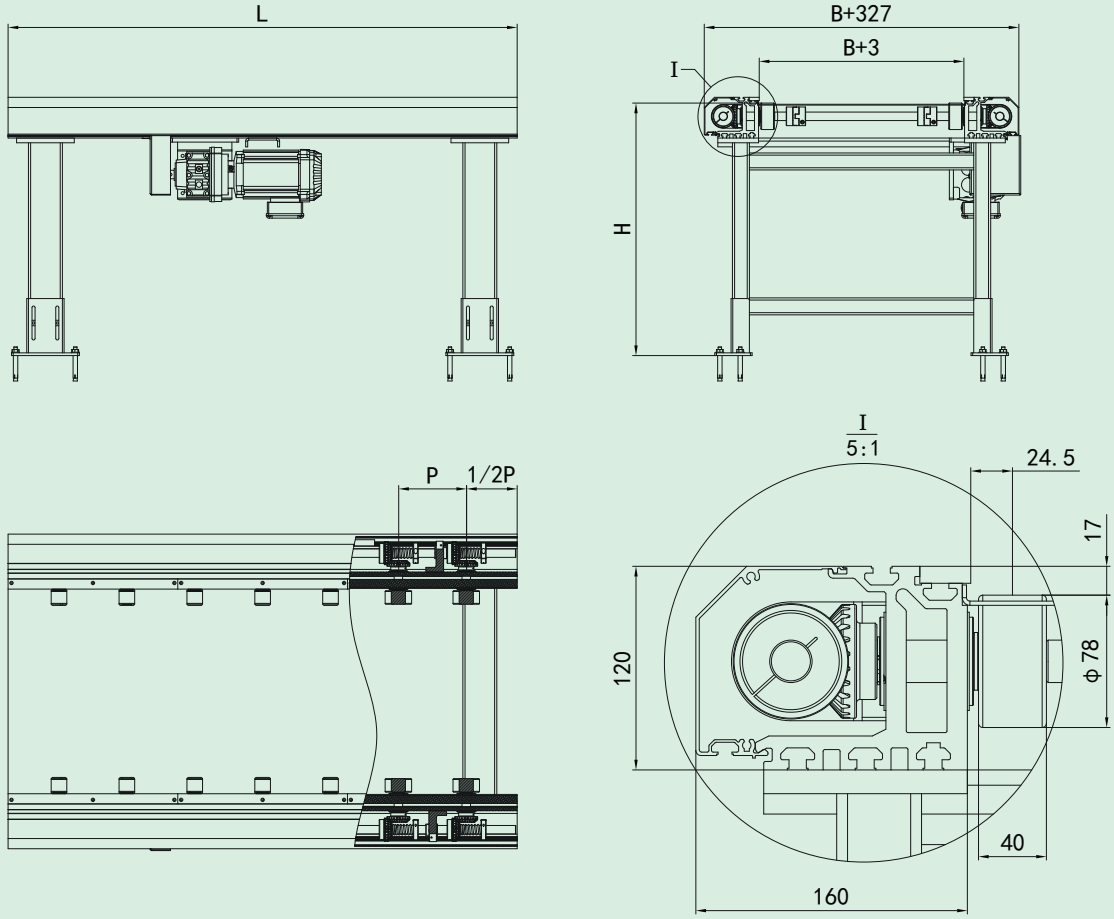

01 模块化托盘输送机
Modular Pallet Conveyor

5.3、TOSH-5-CS 双侧链轮传动双支撑式辊轮输送机
TOSH-5-CS Double-Sided Sprocket-Driven Double-Supported Roller Conveyor

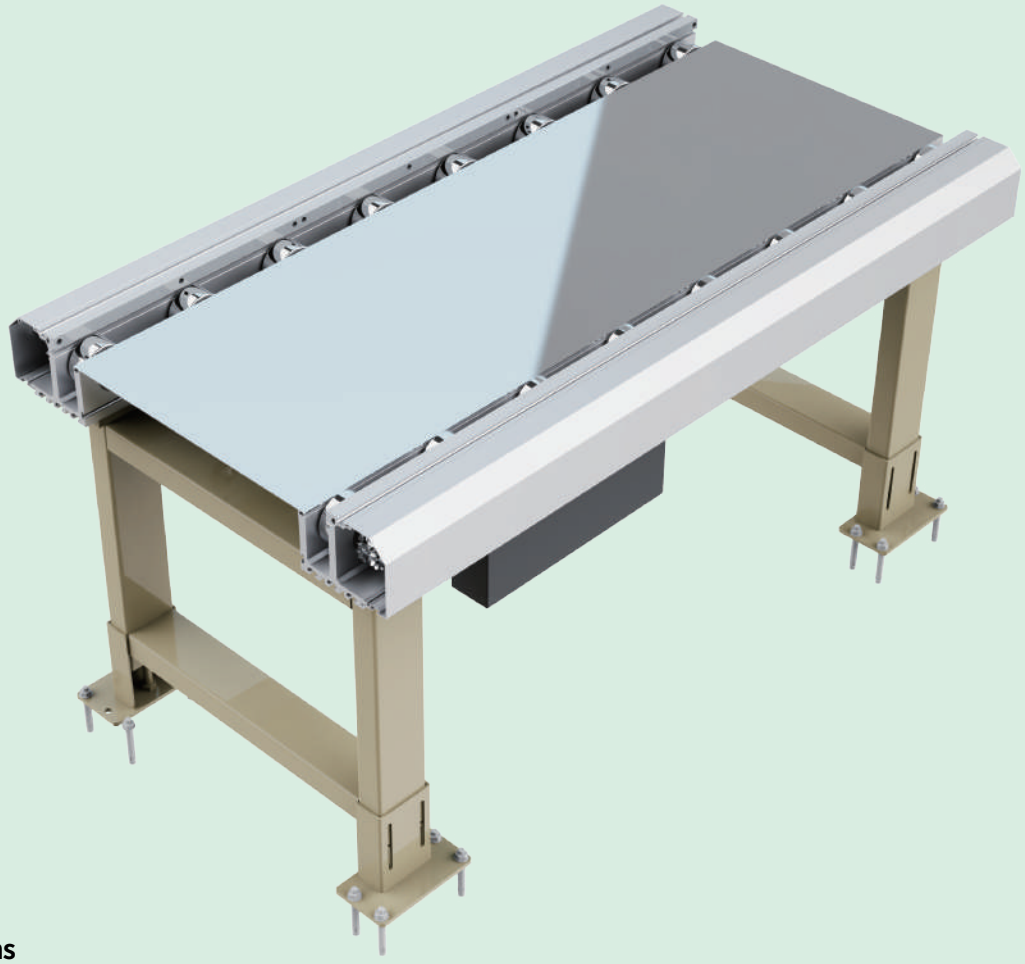

规格参数：
Specifications

型号T Model	线体长度L Conveyor Length	托盘宽度B Pallet Width	输送面高度H Conveying Height	运行速度V Conveyor Speed	辊轮间距P Roller Spacing
TOSH-5-CS	1000~6000mm	400~1200mm	按需 As Needed	最大15m/min Max 15m/min	158/197/247mm

选型示例：
Example of Selection

①型号 Model		②线体长度L Conveyor Length		③托盘宽度B Pallet Width		④输送宽度W Conveying Width		⑤运行速度V Conveyor Speed		⑥辊轮间距P Roller Spacing
TOSH-5-CS	–	L3000	–	W800	–	H500	–	V8	–	P197

01 模块化托盘输送机
Modular Pallet Conveyor

产品特点：
Product Features

- 模块化程度高，配套机构完备，方便维护；
  High modularity, comprehensive supporting mechanisms, and easy maintenance;
- 输送介质为辊轮；
  Conveying medium is rollers；
- 线体边框为专用高强度铝型材，双支撑的结构更加稳定，标准段对接使用，双侧链轮传动；
  The frame of the line comprises specialized high-strength aluminum profiles, featuring a doubly supported structure for added stability, standardized section connections, and double-sided sprocket-driven transmission;
- 适合重载托盘输送，可实现托盘的自动循环和柔性控制；
  Suitable for heavy-duty pallet conveying, enabling automatic pallet circulation and flexible control;
- 总负载小于3000KG；
  Total load less than 3000KG;
- 适用于堆积输送。
  Applicable for accumulation conveying.

尺寸说明：
Dimensional Description

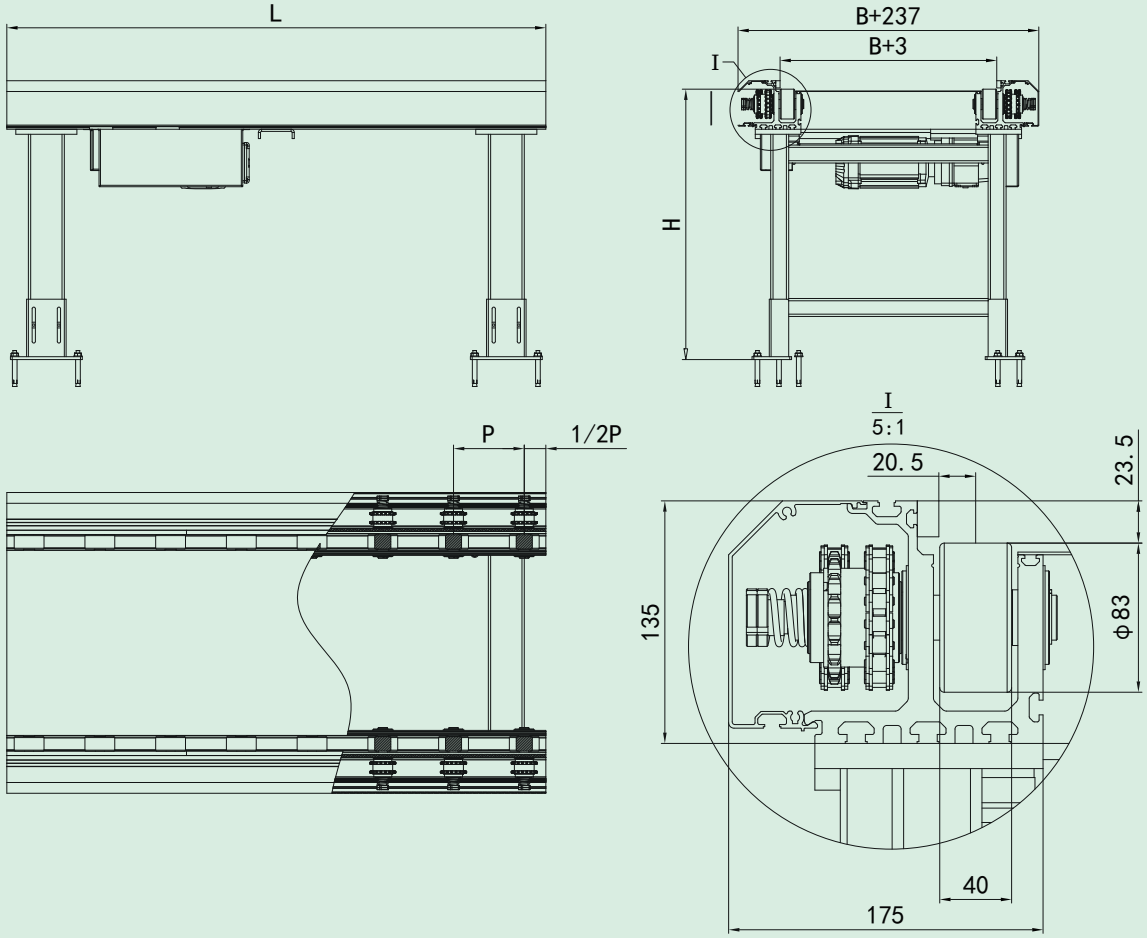

01 模块化托盘输送机
Modular Pallet Conveyor

5.4、TOSH-5-GS 双侧锥齿轮传动双支撑式辊轮输送机
TOSH-5-GS Bilateral Helical Gear Drive Double-Supported Roller Conveyor

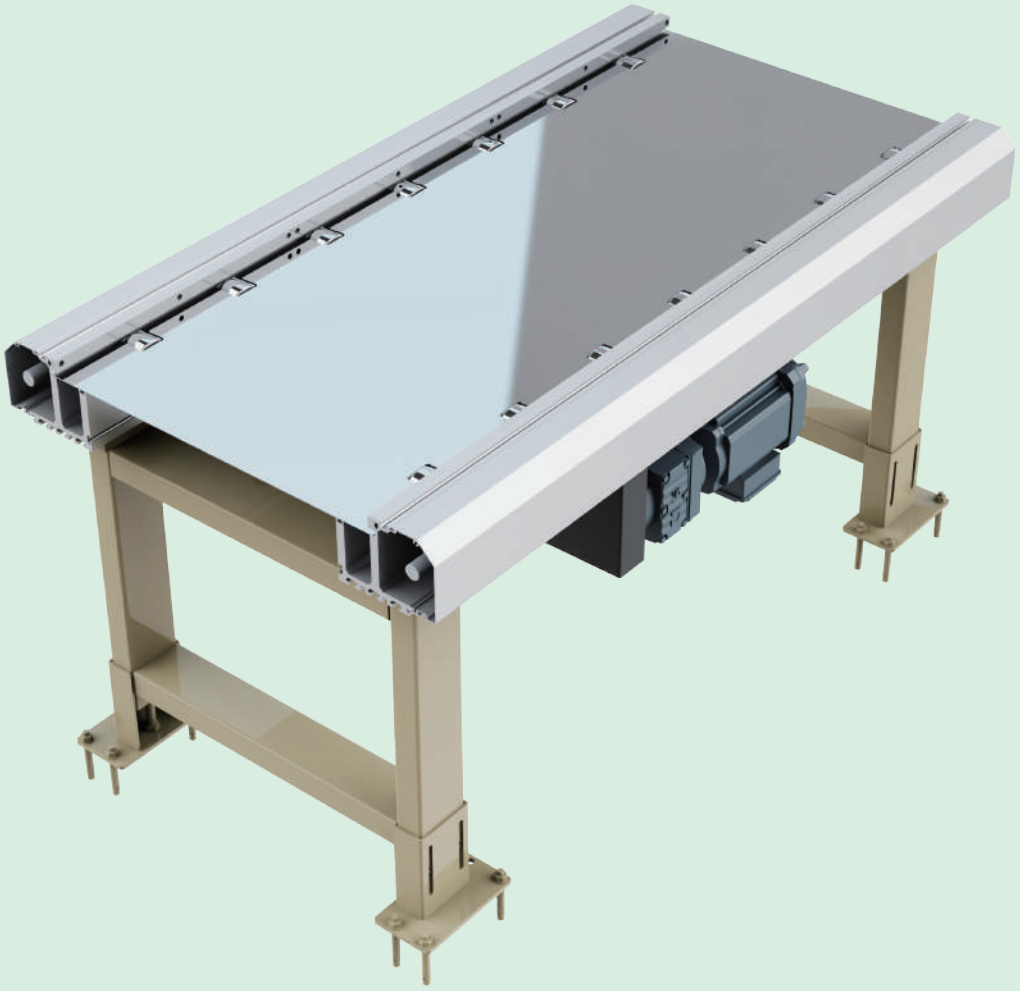

规格参数：
Specifications

型号T Model	线体长度L Conveyor Length	托盘宽度B Pallet Width	输送面高度H Conveying Height	运行速度V Conveyor Speed	辊轮间距P Roller Spacing
TOSH-5-GS	1000~6000mm	400~1200mm	按需 As Needed	3~15m/min	160/200/250mm

选型示例：
Example of Selection

①型号 Model		②线体长度L Conveyor Length		③托盘宽度B Pallet Width		④输送宽度W Conveying Width		⑤运行速度V Conveyor Speed		⑥辊轮间距P Roller Spacing
TOSH-5-GS	–	L3000	–	W800	–	H500	–	V8	–	P200

01 模块化托盘输送机
Modular Pallet Conveyor

产品特点：
Product Features

- 模块化程度高，配套机构完备，方便维护；
  High modularity with complete supporting mechanisms for easy maintenance;
- 输送介质为辊轮；
  The conveying medium is rollers；
- 线体边框为专用高强度铝型材，双支撑的结构更加稳定，标准段对接使用，双侧锥齿轮传动；
  The frame of the line is made of specialized high-strength aluminum profiles, featuring a double-supported structure for enhanced stability,
  Standard sections are interconnected, utilizing double-sided helical gear drive；
- 适合重载托盘输送，可实现托盘的自动循环和柔性控制；
  Ideal for heavy-duty pallet conveying, capable of automated pallet circulation and flexible control;
- 总负载小于3000KG；
  Total load less than 3000KG;
- 适用于堆积输送。
  Suitable for accumulation conveying.

尺寸说明：
Dimensional Description

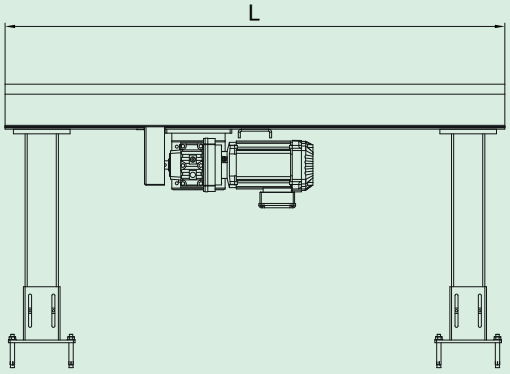

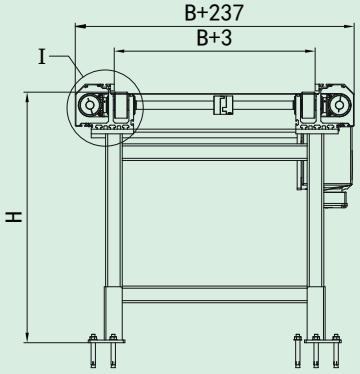

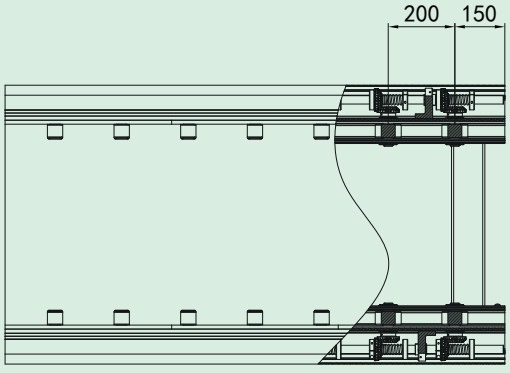

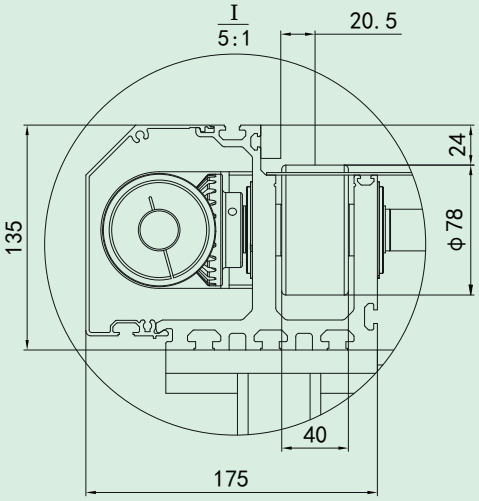

02 托盘输送配套设备
Pallet Conveying Auxiliary Equipment

托盘输送配套设备，是作为托盘输送机的辅助，只要用于生产线的对接处或需要有变换的位置。有转弯、转台、提升、顶升横移等不同的机构，完成不同的动作，使生产线闭环连接，不同负载的输送机型对应不同负载的配套设备，满足客户的生产需求。

Pallet conveying auxiliary equipment serves as supplementary components for pallet conveyors, specifically used at junctions within production lines or locations requiring adaptability. It comprises different mechanisms such as turning, rotating tables, lifting, top lifting, lateral shifting, and more, executing various actions to establish a closed-loop connection within the production line. Corresponding auxiliary equipment for conveyors of varying loads caters to the diverse production requirements of customers.

02 托盘输送配套设备
Pallet Conveying Auxiliary Equipment

1、TOSH-FC90 90°度强制转弯机构
TOSH-FC90 90-Degree Forced Curve Unit

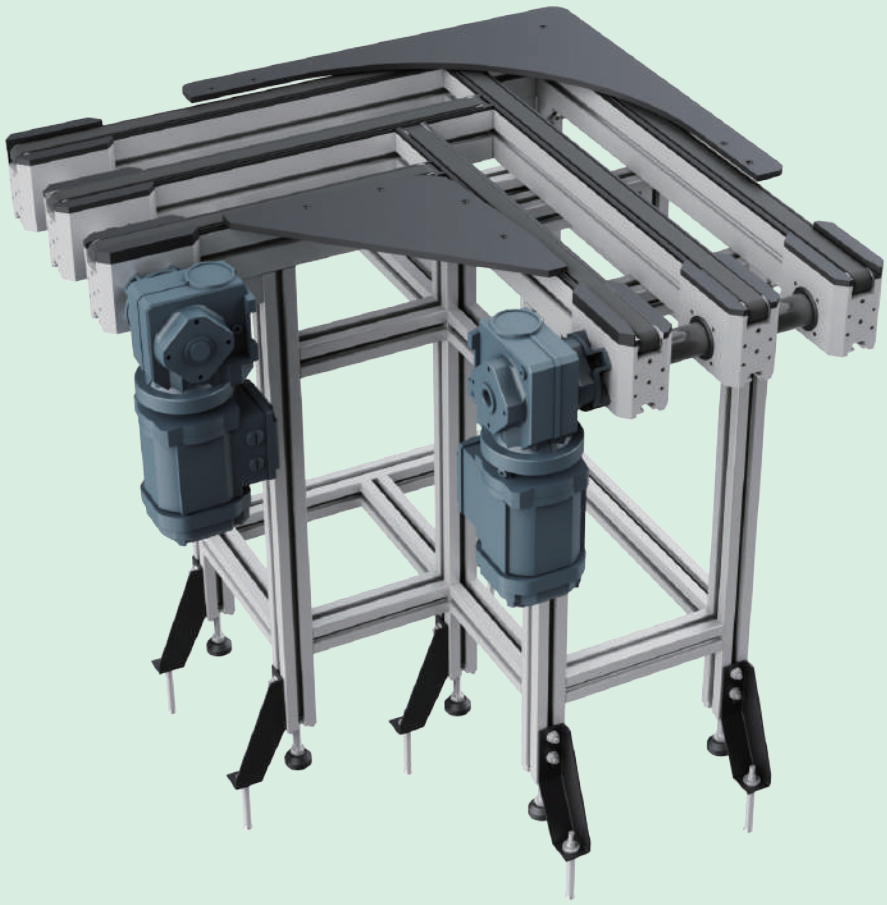

规格参数：
Specifications

型号T Model	托盘宽度B Pallet Width	托盘长度L Pallet Length	输送面高度H Conveying Height	运行速度V Conveyor Speed	对接线体 Interlocking Conveyor Sections
TOSH-FC90	160~320	160~400	按需 As Needed	最大20m/min Max 20m/min	TOSH-1/TOSH-1P/TOSH-2

选型示例：
Example of Selection

①型号 Model		②托盘宽度B Pallet Width		③托盘长度L Pallet Length		④输送宽度W Conveying Width		⑤运行速度V Conveyor Speed		⑥对接线体 Interlocking Conveyor Sections
TOSH-FC90	–	B320	–	L320	–	H900	–	V8	–	TOSH-1

02 托盘输送配套设备
Pallet Conveying Auxiliary Equipment

产品特点：
Product Features

- 模块化设计，可独立运转，组装快捷；
  Modular design allowing independent operation and quick assembly；
- 传输介质为防静电齿形带；
  Transmission medium consists of an anti-static toothed belt；
- 此机构配套TOSH-1、TOSH-1P和TOSH-2使用，运行速度约为主线体的90%；
  This mechanism is compatible with TOSH-1, TOSH-1P, and TOSH-2 systems, operating at approximately 90% of the mainline speed；
- 实现托盘的90°转弯，不改变托盘的相对运行方向;
  Enables 90-degree turns for pallets without altering their relative direction of movement；
- 此机构单个托盘总重量≤30KG;
  Maximum total weight per individual pallet for this mechanism is ≤30KG；
- 输送托盘的长宽比不得＞1.5（Lwt/Bwt≤1.5）；
  The length-to-width ratio of conveyed pallets must not exceed 1.5 (Lwt/Bwt≤1.5)；
- 单个转弯机构禁止输送一个以上的托盘或出现托盘堆积。
  Each turning mechanism prohibits the conveyance of more than one pallet or the occurrence of pallet accumulation.

尺寸说明：
Dimensional Description

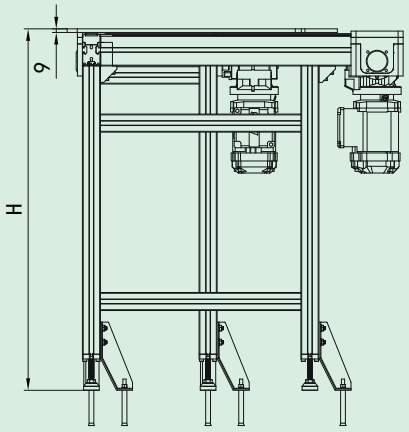

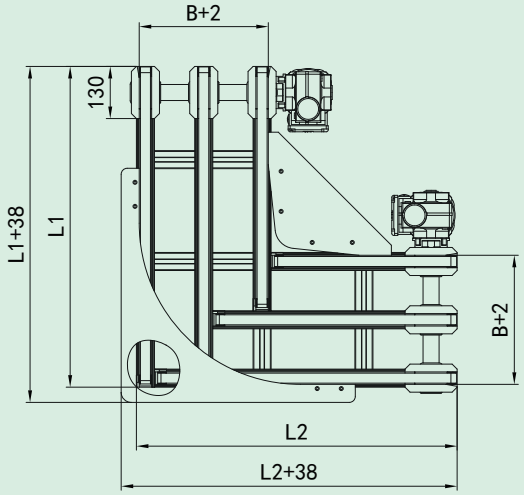

02 托盘输送配套设备
Pallet Conveying Auxiliary Equipment

2、TOSH-DC90 90°度圆带转弯机构.
TOSH-DC90 90-Degree Round Belt Curve Unit

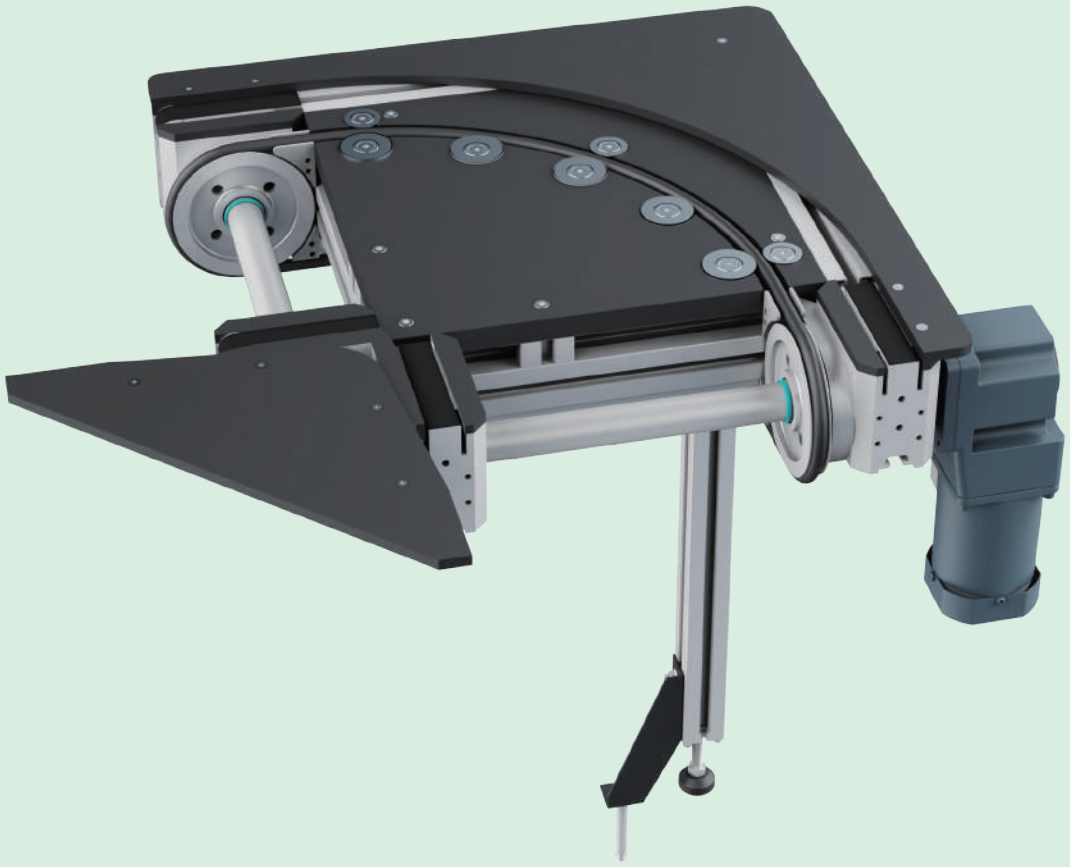

规格参数:
Specifications

型号T Model	托盘宽度B Pallet Width	托盘长度L Pallet Length	输送面高度H Conveying Height	运行速度V Conveyor Speed	对接线体 Interlocking Conveyor Sections
TOSH-DC90	160~320	160~400	按需 As Needed	最大20m/min Max 20m/min	TOSH-1/TOSH-1P/TOSH-2

选型示例:
Example of Selection

①型号 Model		②托盘宽度B Pallet Width		③托盘长度L Pallet Length		④输送宽度W Conveying Width		⑤运行速度V Conveyor Speed		⑥对接线体 Interlocking Conveyor Sections
TOSH-DC90	–	B320	–	L400	–	H900	–	V12	–	TOSH-1

02 托盘输送配套设备
Pallet Conveying Auxiliary Equipment

产品特点：
Product Features

- 此机构配套TOSH-1、TOSH-1P和TOSH-2使用，模块化设计，可独立运转，组装快捷；
  This mechanism is compatible with TOSH-1, TOSH-1P, and TOSH-2 systems, featuring a modular design for independent operation and swift assembly；
- 传输介质为尼龙圆带；
  The transmission medium is a nylon circular belt；
- 实现托盘的90°转弯，不改变托盘的相对运行方向；
  Achieves a 90° turn for pallets without altering their relative direction of movement；
- 此机构单个托盘+负载总重量≤30KG；
  Maximum total weight per individual pallet + load for this mechanism is ≤30KG；
- 输送托盘的长宽比不得＞1.5（Lwt/Bwt≤1.5）；
  The length-to-width ratio of conveyed pallets must not exceed 1.5 (Lwt/Bwt≤1.5)；
- 单个转弯机构禁止输送一个以上的托盘或出现托盘堆积。
  Each turning mechanism prohibits the conveyance of more than one pallet or the occurrence of pallet accumulation.

尺寸说明：
Dimensional Description

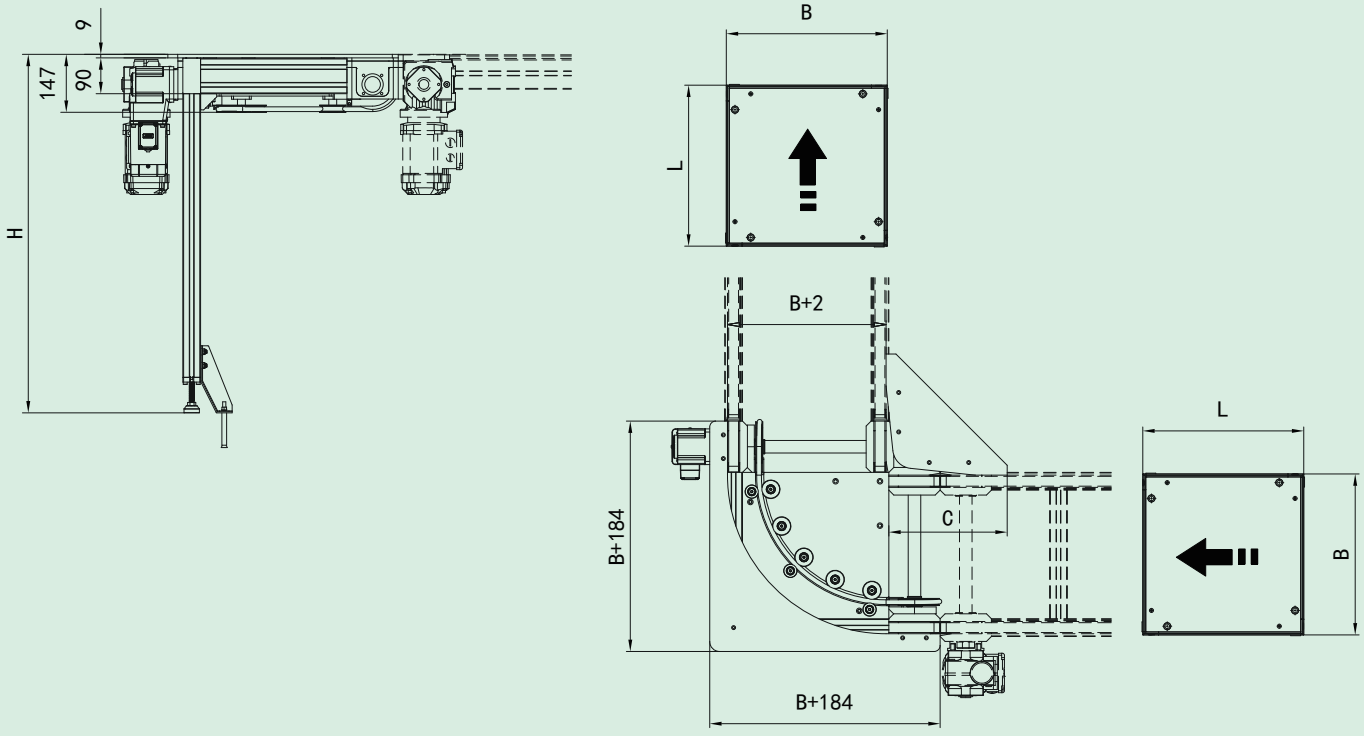

02 托盘输送配套设备
Pallet Conveying Auxiliary Equipment

3、TOSH-DC180 180°圆带转弯机构
TOSH-DC180 180-Degree Round Belt Curve Unit

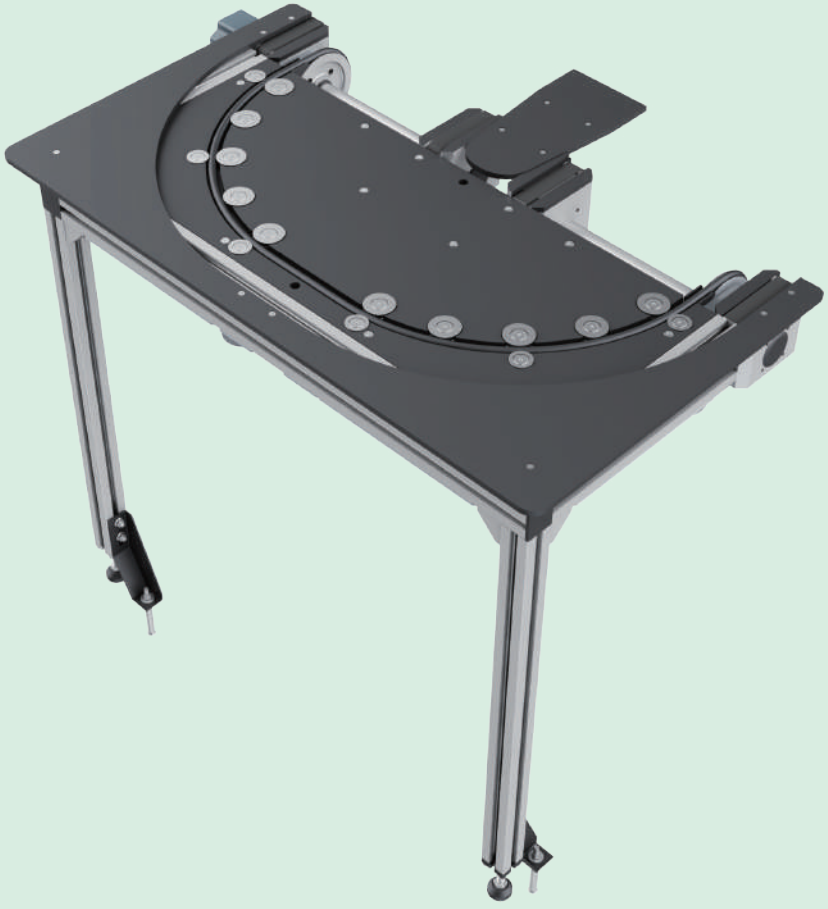

规格参数：
Specifications

型号T Model	托盘宽度B Pallet Width	托盘长度L Pallet Length	输送面高度H Conveying Height	运行速度V Conveyor Speed	对接线体 Interlocking Conveyor Sections
TOSH-DC180	160~320	160~400	按需 As Needed	最大20m/min Max 20m/min	TOSH-1/TOSH-1P/TOSH-2

选型示例：
Example of Selection

①型号 Model		②托盘宽度B Pallet Width		③托盘长度L Pallet Length		④输送宽度W Conveying Width		⑤运行速度V Conveyor Speed		⑥对接线体 Interlocking Conveyor Sections
TOSH-DC180	–	B240	–	L320	–	H900	–	V11	–	TOSH-2

02 托盘输送配套设备
Pallet Conveying Auxiliary Equipment

产品特点：
Product Features

- 此机构配套TOSH-1、TOSH-1P和TOSH-2使用，模块化设计，可独立运转，组装快捷；
  This mechanism is designed to be used with TOSH-1, TOSH-1P, and TOSH-2, featuring a modular design that allows independent operation and quick assembly；
- 传输介质为尼龙圆带；
  The transmission medium is nylon round belt；
- 实现托盘的180°转弯，不改变托盘的相对运行方向；
  It achieves a 180° turn of the pallet without altering the relative running direction of the tray；
- 此机构单个托盘总重量≤30KG；
  The total weight of a single pallet for this mechanism is ≤30KG；
- 输送托盘的长宽比不得＞1.5（Lwt/Bwt≤1.5）；
  The length-to-width ratio for conveying pallet must not exceed 1.5 (Lwt/Bwt≤1.5)；
- 单个转弯机构禁止输送一个以上的托盘或出现托盘堆积。
  A single turning mechanism is prohibited from conveying more than one pallet or causing pallet accumulation.

尺寸说明：
Dimensional Description

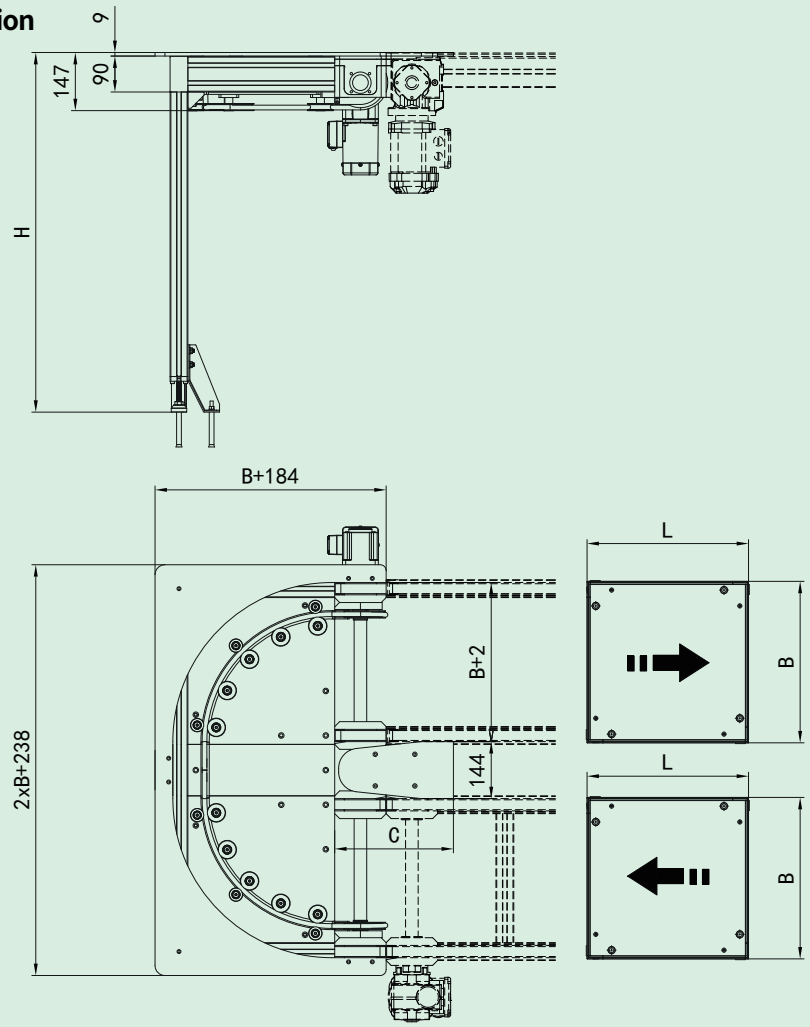

02 托盘输送配套设备
Pallet Conveying Auxiliary Equipment

4、顶升横移变向输送机构
Lift and Transverse Shifting Directional Conveying Unit

4.1、TOSH-LT30 30KG 顶升横移变向输送机构
TOSH-LT30 30KG Lift and Transverse Shifting Directional Conveying Unit

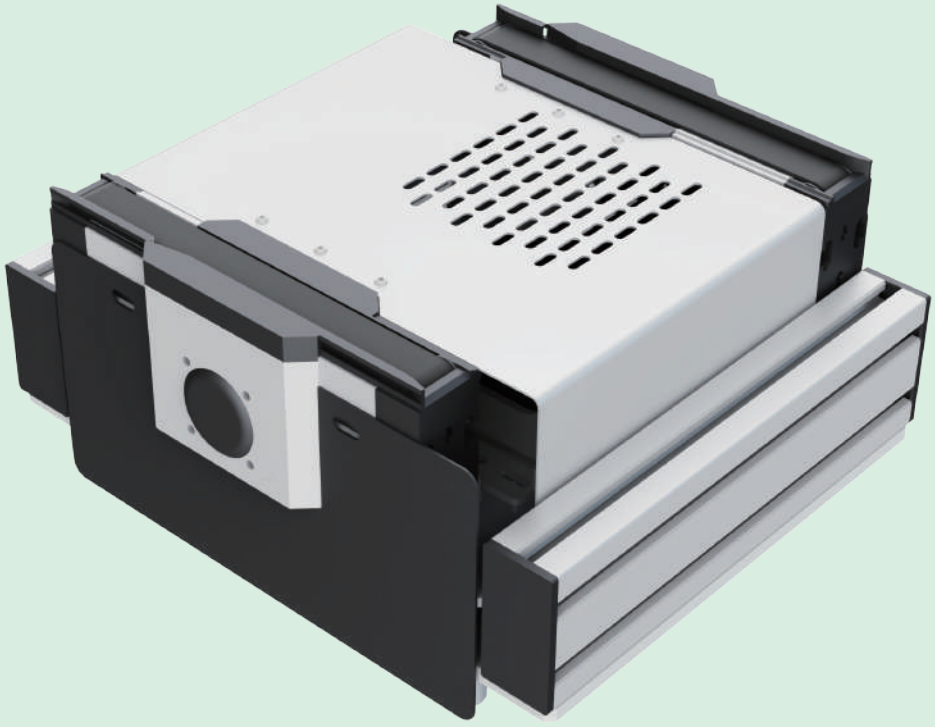

规格参数：
Specifications

型号T Model	托盘宽度B Pallet Width	托盘长度L Pallet Length	运行速度V Conveyor Speed	对接线体 Interlocking Conveyor Sections
TOSH-LT30	160~480mm	160~480mm	最大20m/min Max 20m/min	TOSH-1/TOSH-1P/TOSH-2

选型示例：
Example of Selection

①型号 Model		②托盘宽度B Pallet Width		③托盘长度L Pallet Length		⑤运行速度V Conveyor Speed		⑥对接线体 Interlocking Conveyor Sections
TOSH-LT30	–	B320	–	L320	–	V12	–	TOSH-1

02 托盘输送配套设备
Pallet Conveying Auxiliary Equipment

产品特点：
Product Features

- 此机构配套TOSH-1、TOSH-1P和TOSH-2使用，可独立运转，组装快捷；
  This unit is compatible with TOSH-1, TOSH-1P, and TOSH-2 systems, capable of independent operation and swift assembly；
- 传输介质为防静电齿形带；
  The transmission medium is an anti-static toothed belt；
- 实现托盘的90度平移转向，托盘与前进方向的相对位置会发生改变；
  Enables a 90-degree lateral shift for pallets, altering the relative position of the pallet in relation to the forward direction；
- 单个托盘+负载总重量≤30KG；
  Maximum total weight per pallet + load capacity is ≤30KG；
- 每次只可以通过一个托盘，不可堆积。
  Only one pallet can pass through at a time, no stacking allowed.

尺寸说明：
Dimensional Description

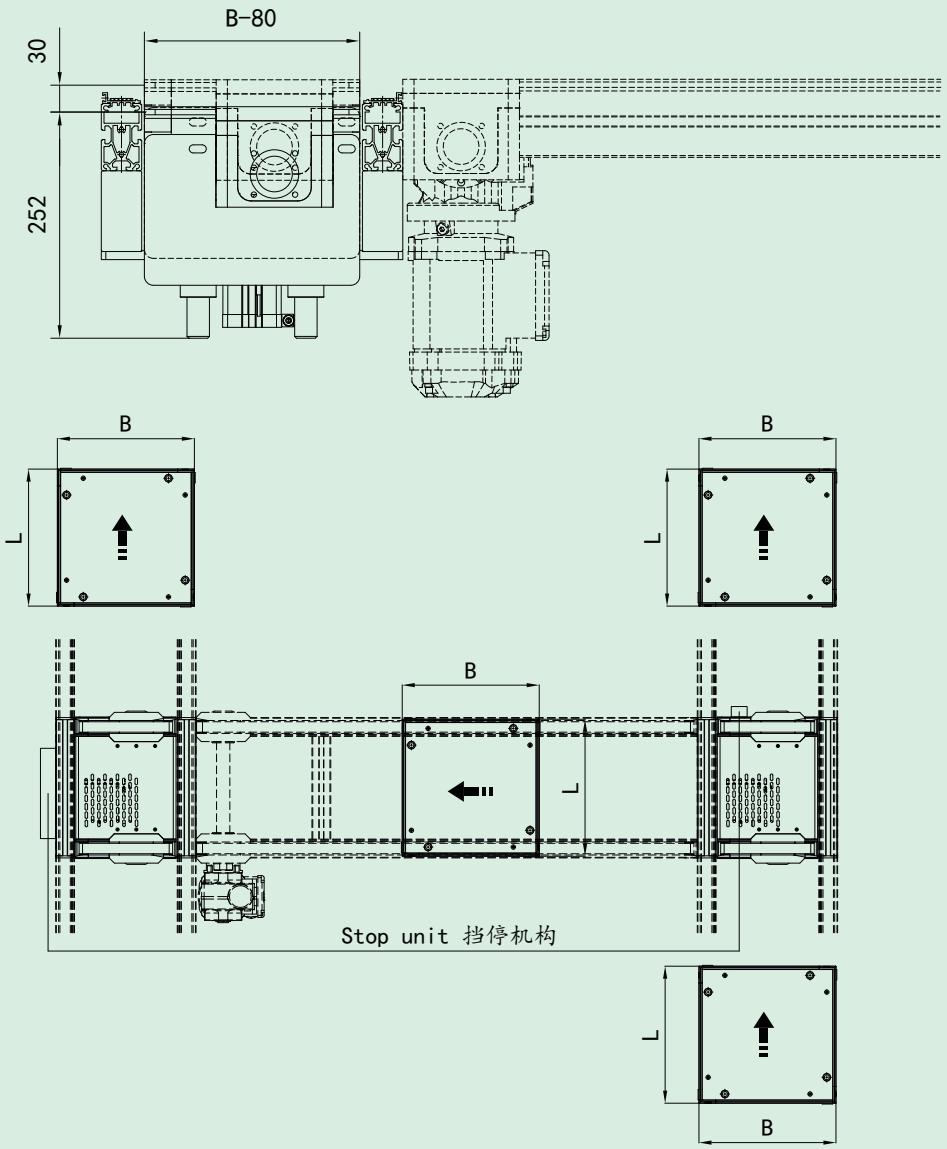

02 托盘输送配套设备
Pallet Conveying Auxiliary Equipment

4.2、TOSH-LT200 200KG 顶升横移变向输送机构
TOSH-LT200 200KG Lift and Transverse Shifting Directional Conveying Unit

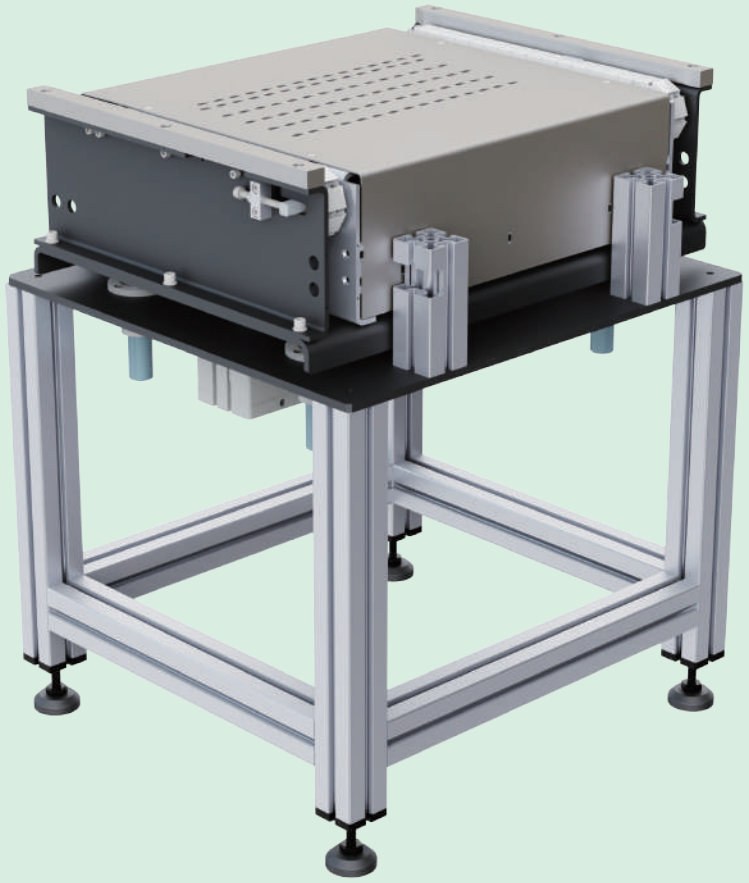

规格参数：
Specifications

型号T Model	托盘宽度B Pallet Width	托盘长度L Pallet Length	运行速度V Conveyor Speed	对接线体 Interlocking Conveyor Sections
TOSH-LT200	400~1000mm	400~1000mm	最大20m/min Max 20m/min	TOSH-4/辊筒线 TOSH-4/Roller Conveyor

选型示例：
Example of Selection

①型号 Model		②托盘宽度B Pallet Width		③托盘长度L Pallet Length		⑤运行速度V Conveyor Speed		⑥对接线体 Interlocking Conveyor Sections
TOSH-LT200	–	B600	–	L700	–	V10	–	TOSH-4

02 托盘输送配套设备
Pallet Conveying Auxiliary Equipment

产品特点：
Product Features

- 此机构配套TOSH-4使用，模块化设计，可独立运转，组装快捷；
  This mechanism is compatible with TOSH-4, featuring a modular design for independent operation and swift assembly；
- 横移输送机传输介质通常为U型附板链，可根据不同需求选用不同的传输介质；
  The lateral shift conveyor typically uses a U-shaped attachment plate chain as the transmission medium, which can be selected based on specific requirements；
- 气动升降，行程可根据需求定制；
  Pneumatic lifting, with customizable stroke lengths as needed；
- 实现托盘的90度平移转向，托盘与前进方向的相对位置会发生改变；
  Enables a 90-degree lateral shift for pallets, altering the relative position of the pallet in relation to the forward direction；
- 单个托盘+负载总重量≤200KG；
  Maximum total weight per pallet + load capacity is ≤200KG；
- 每次只可以通过一个托盘，不可堆积。
  Only one pallet can pass through at a time, no stacking allowed.

尺寸说明：
Dimensional Description

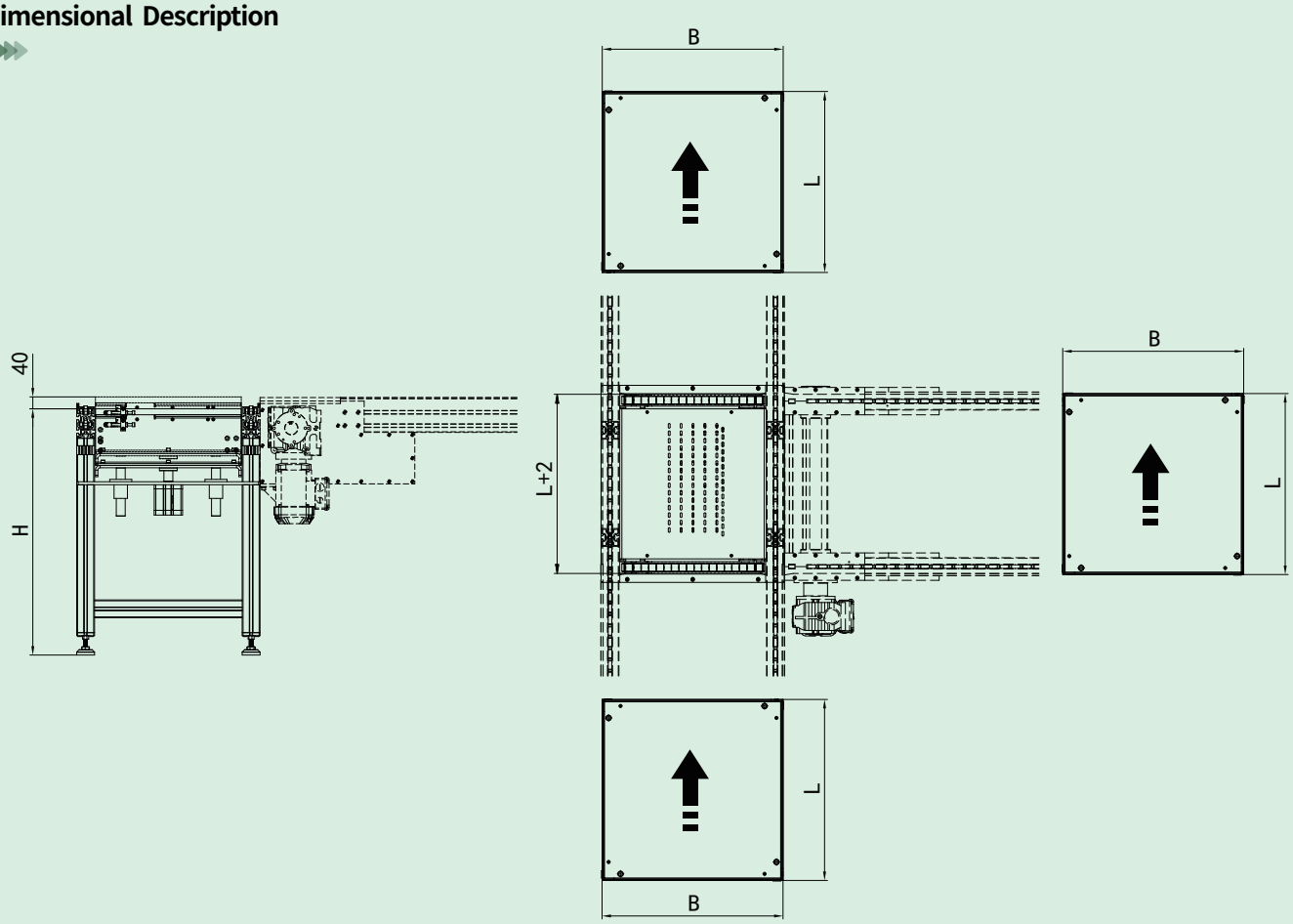

02 托盘输送配套设备
Pallet Conveying Auxiliary Equipment

4.3、TOSH-LT600 600KG 顶升横移变向输送机构
TOSH-LT600 600KG Lift and Transverse Shifting Directional Conveying Unit

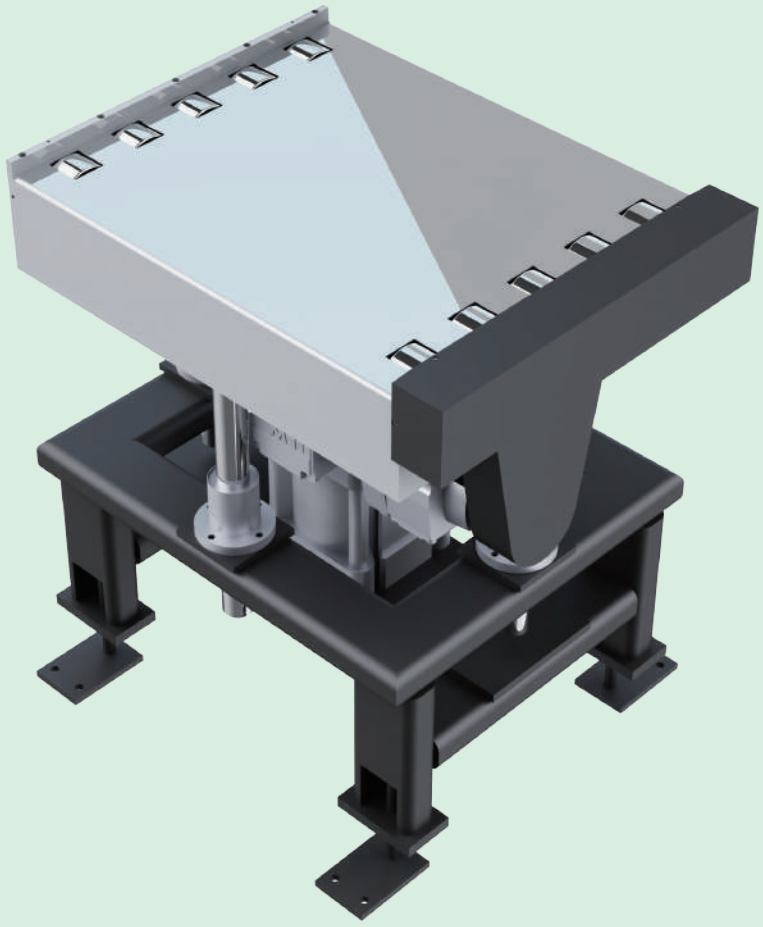

规格参数：
Specifications

型号T Model	托盘宽度B Pallet Width	托盘长度L Pallet Length	运行速度V Conveyor Speed	对接线体 Interlocking Conveyor Sections
TOSH-LT600	400~1000mm	400~1000mm	最大15m/min Max 15m/min	TOSH-5

选型示例：
Example of Selection

①型号 Model		②托盘宽度B Pallet Width		③托盘长度L Pallet Length		⑤运行速度V Conveyor Speed		⑥对接线体 Interlocking Conveyor Sections
TOSH-LT600	–	B600	–	L800	–	V10	–	TOSH-5

02 托盘输送配套设备
Pallet Conveying Auxiliary Equipment

产品特点：
Product Features

- 配套TOSH-5使用，模块化设计，可独立运转，组装快捷；
  This mechanism is compatible with TOSH-5, featuring a modular design for independent operation and swift assembly；
- 横移输送机传输介质通常为辊轮；
  The conveying medium of a lateral-moving conveyor is typically rollers;
- 气动升降，行程可根据需求定制；
  Pneumatic lifting, with customizable stroke lengths as needed；
- 实现托盘的90度平移转向，托盘与前进方向的相对位置会发生改变；
  Enables a 90-degree lateral shift for pallets, altering the relative position of the pallet in relation to the forward direction；
- 单个托盘+负载总重量≤2000KG；
  Maximum total weight per pallet + load capacity is ≤2000KG；
- 每次只可以通过一个托盘，不可堆积。
  Only one pallet can pass through at a time, no stacking allowed.

尺寸说明：
Dimensional Description

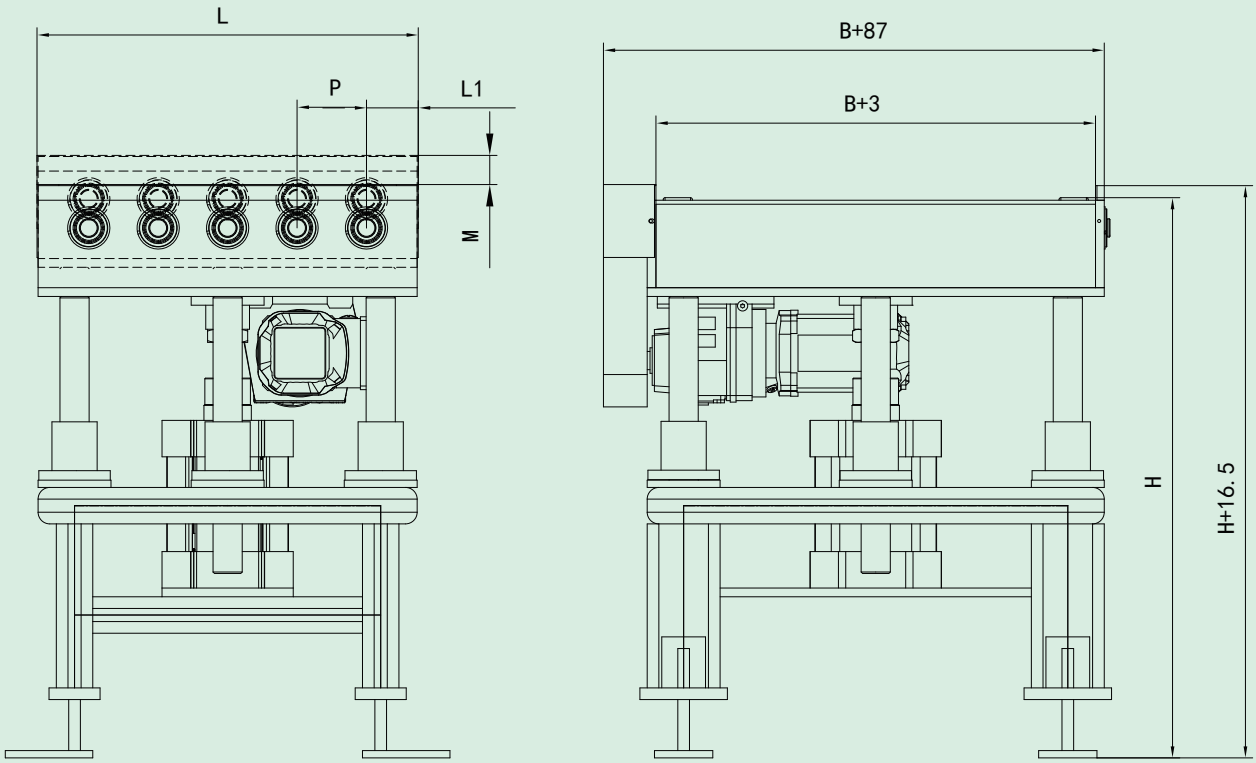

02 托盘输送配套设备
Pallet Conveying Auxiliary Equipment

5、顶升定位机构
Lifting Positioning Unit

5.1、TOSH-LP30 30KG 顶升定位机构
TOSH-LP30 30KG Lifting Positioning Unit

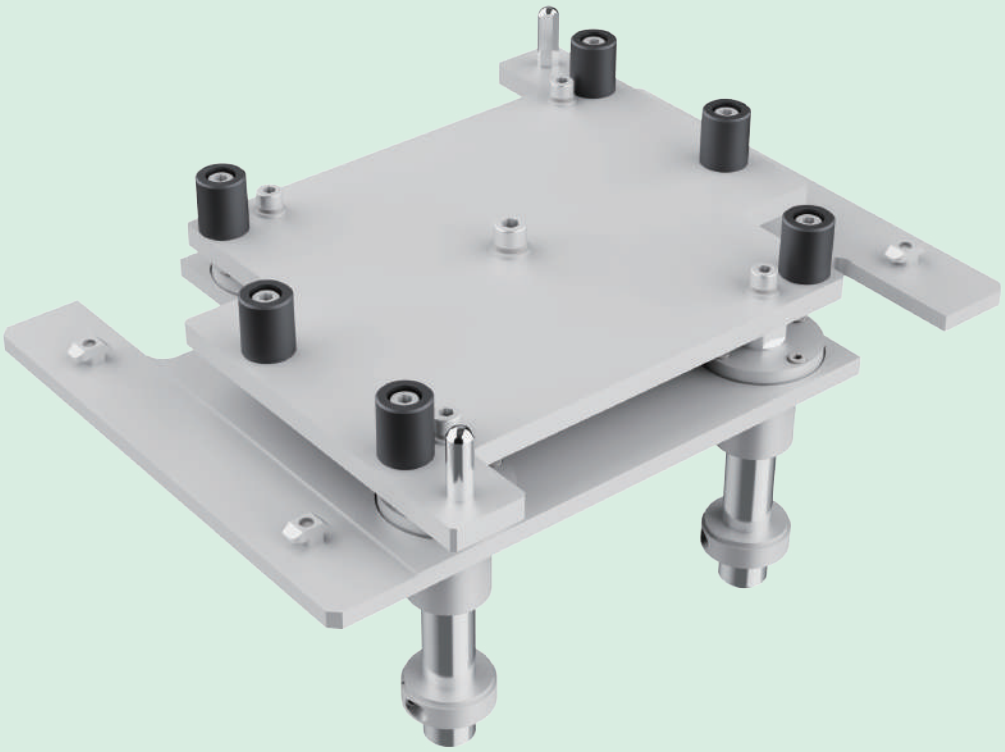

规格参数：
Specifications

型号T Model	托盘宽度B Pallet Width	托盘长度L Pallet Length	额定行程H Rated Stroke	对接线体 Interlocking Conveyor Sections
TOSH-LP30	160~480mm	160~480mm	10/17mm	TOSH-1/TOSH-1P/TOSH-2

选型示例：
Example of Selection

①型号 Model		②托盘宽度B Pallet Width		③托盘长度L Pallet Length		④额定行程H Rated Stroke		⑥对接线体 Interlocking Conveyor Sections
TOSH-LP30	–	B240	–	L240	–	H10	–	TOSH-1P

02 托盘输送配套设备
Pallet Conveying Auxiliary Equipment

产品特点：
Product Features

- 此机构配套TOSH-1、TOSH-1P和TOSH-2使用，模块化设计，可独立运转，组装快捷；
  This mechanism is compatible with TOSH-1, TOSH-1P, and TOSH-2 systems, featuring modular design for independent operation and swift assembly；
- 气动升降，额定行程根据托盘的不同有H额=10mm和17mm两种；
  Pneumatic lifting, with rated strokes available in two variations: H=10mm and 17mm, depending on the pallet type；
- 实现托盘提升定位，通过销与托盘上的定位销套配合完成定位，定位精度±0.1mm；
  Enables pallet lifting and positioning, achieving precise positioning (±0.1mm) through the interaction of pins and locating pin sleeves on the pallet；
- 单个托盘+负载总重量≤30KG；
  Maximum total weight per pallet + load capacity is ≤30KG；
- 此机构不包括挡停机构；
  This mechanism does not include a stopping device；
- 每次只可以完成一个托盘的操作。
  Only one pallet operation can be completed at a time.

尺寸说明：
Dimensional Description

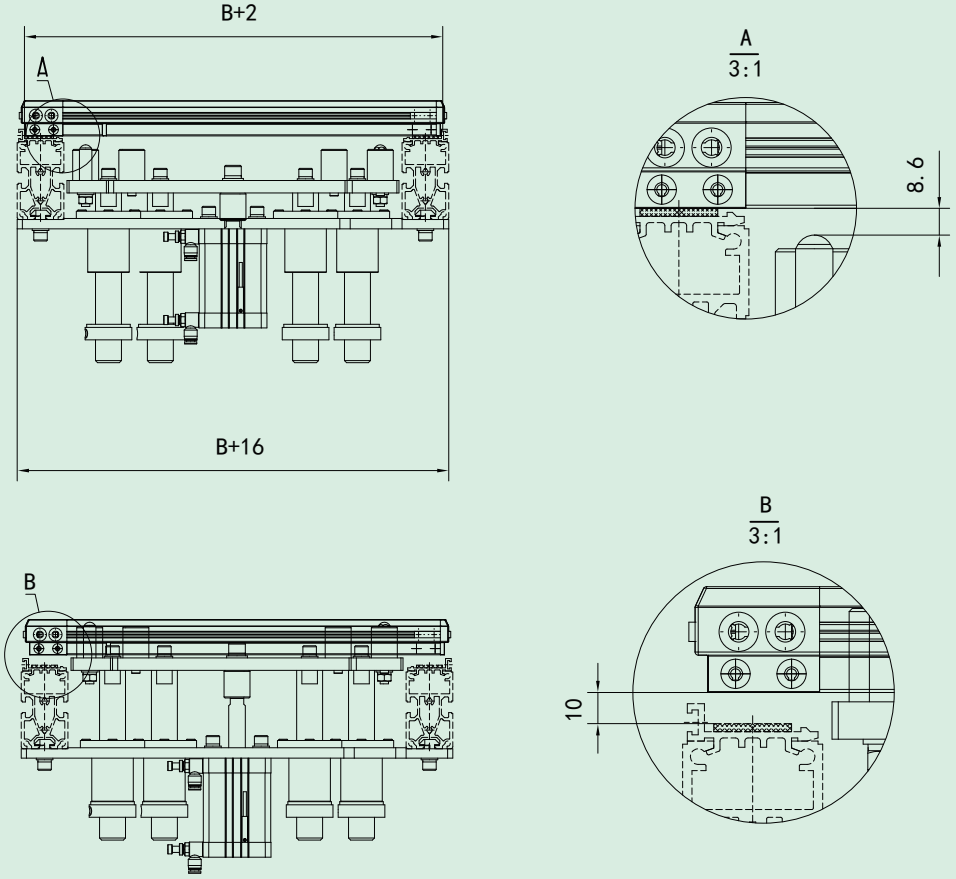

02 托盘输送配套设备
Pallet Conveying Auxiliary Equipment

6、升降机构
Lifting Unit

6.1、TOSH-LI30 30KG 升降机构
TOSH-LI30 30KG Lifting Unit



规格参数：
Specifications

型号T Model	托盘宽度B Pallet Width	托盘长度L Pallet Length	下层输送面高度h_1 Lower Conveying Height	上层输送面高度h_2 Upper Conveying Height	升降速度V Lifting Speed	升降机构高度H Lifting Unit Height
TOSH-LI30	160~480mm	160~480mm	按需 As Needed	按需 As Needed	≤20m/min	按需 As Needed

选型示例：
Example of Selection

①型号 Model	②托盘宽度B Pallet Width	③托盘长度L Pallet Length	④下层输送面高度h_1 Lower Conveying Height	⑤上层输送面高度h_2 Upper Conveying Height	⑥速度V Lifting Speed	⑦升降机构高度H Lifting Unit Height
TOSH-LI30 –	B320 –	L 320 –	$h_1$400 –	$h_2$900 –	V15 –	H1200

02 托盘输送配套设备
Pallet Conveying Auxiliary Equipment

产品特点：
Product Features

- 此机构配套TOSH-1、TOSH-1P和TOSH-2使用，模块化设计，可独立运转，组装快捷；
  This mechanism is compatible with TOSH-1, TOSH-1P, and TOSH-2 systems, designed with modularity for independent operation and swift assembly；
- 机构中的标准小输送机传输介质为防静电齿形带，可根据需求选用不同的传输介质；
  The standard conveyor belt within the mechanism is an anti-static toothed belt, offering the flexibility to choose different transmission media based on requirements；
- 标准气缸升降，升降速度≤260mm/s；
  Standard pneumatic cylinder lifting, with a lifting speed ≤260mm/s；
- 完成托盘在上下两层输送线之间的垂直输送，托盘与前进方向的相对位置会发生改变；
  Enables vertical conveying of pallets between upper and lower conveyor lines, changing the relative position of the pallet in relation to the forward direction；
- 单个托盘+负载总重量≤30KG；
  Maximum total weight per pallet + load capacity is ≤30KG；
- 每次只可以完成一个托盘的操作。
  Only one pallet operation can be completed at a time.

尺寸说明：
Dimensional Description

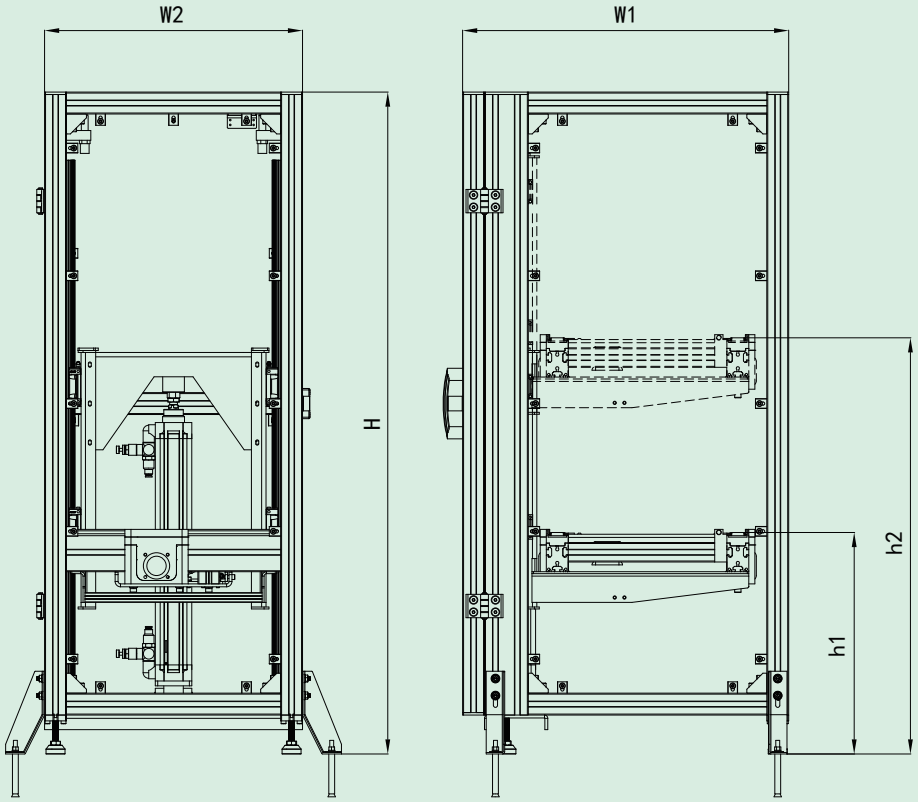

02 托盘输送配套设备
Pallet Conveying Auxiliary Equipment

6.2、TOSH-LI200 200KG 升降机构
TOSH-LI200 200KG Lifting Unit



规格参数：
Specifications

型号T Model	托盘宽度B Pallet Width	托盘长度L Pallet Length	下层输送面高度h_1 Lower Conveying Height	上层输送面高度h_2 Upper Conveying Height	升降速度V Lifting Speed	升降机构高度H Lifting Unit Height
TOSH-LI200	400~1000mm	400~1000mm	按需 As Needed	按需 As Needed	≤20m/min	按需 As Needed

选型示例：
Example of Selection

①型号 Model	②托盘宽度B Pallet Width	③托盘长度L Pallet Length	④下层输送面高度h_1 Lower Conveying Height	⑤上层输送面高度h_2 Upper Conveying Height	⑥速度V Lifting Speed	⑦升降机构高度H Lifting Unit Height
TOSH-LI200	– B600	– L 600	– $h_1$400	– $h_2$900	– V10	– H1200

02 托盘输送配套设备
Pallet Conveying Auxiliary Equipment

产品特点：
Product Features

- 此机构配套TOSH-4使用，模块化设计，可独立运转，组装快捷；
  Designed to complement TOSH-4, featuring modular design for independent operation and swift assembly.
- 机构中的输送机传输介质为U型附板链，可根据需求选用不同的传输介质；
  The conveying medium within the mechanism is a U-shaped attachment plate chain, adaptable to different transmission media as needed.
- 框架为碳钢喷塑，保证强度；
  Frame constructed from carbon steel with powder coating for ensured strength.
- 气动升降；
  Pneumatic lifting capability.
- 完成托盘在上下两层输送线之间的垂直输送，托盘与前进方向的相对位置会发生改变；
  Enables vertical conveying of pallets between upper and lower conveyor lines, altering the relative position of the pallet in relation to the forward direction.
- 单个托盘+负载总重量≤200KG；
  Maximum total weight per pallet + load capacity is ≤200KG.
- 每次只可以完成一个托盘的操作；
  Only one pallet operation can be completed at a time.

尺寸说明：
Dimensional Description

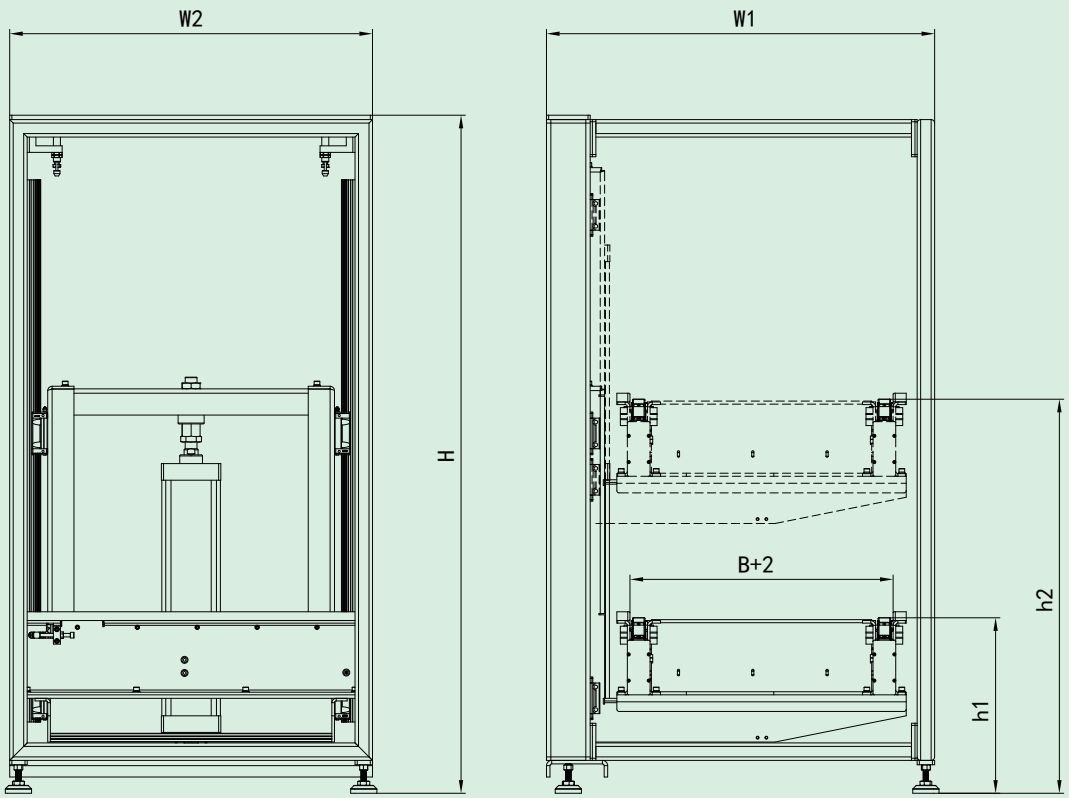

02 托盘输送配套设备
Pallet Conveying Auxiliary Equipment

7、旋转变向输送机构
Rotation Shifting Directional Unit

7.1、TOSH-RT30 30KG 旋转变向输送机构
TOSH-RT30 30KG Rotation Shifting Directional Unit

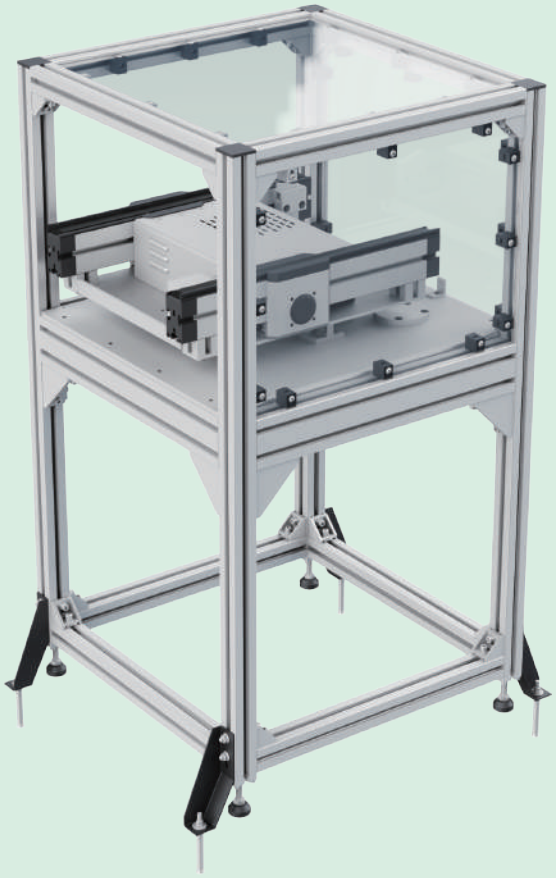

规格参数：
Specifications

型号T Model	托盘宽度B Pallet Width	托盘长度L Pallet Length	线体高度H Conveyor Height	运行速度V Conveyor Speed	输送面高度h Conveying Height	对接线体 Interlocking Conveyor Sections
TOSH-RT30	160~480mm	160~480mm	按需 As Needed	最大20m/min Max 20m/min	按需 As Needed	TOSH-1/TOSH-1P/TOSH-2

选型示例：
Example of Selection

①型号 Model		②托盘宽度B Pallet Width		③托盘长度L Pallet Length		④线体高度H Conveyor Height		⑤运行速度V Conveyor Speed		⑥输送面高度h Conveying Height		⑦ 对接线体 Interlocking Conveyor Sections
TOSH-RT30	–	B320	–	L 320	–	H850	–	V9	–	h1200	–	TOSH-1

02 托盘输送配套设备
Pallet Conveying Auxiliary Equipment

产品特点：
Product Features

- 此机构配套TOSH-1、TOSH-1P和TOSH-2使用，模块化设计，可独立运转，组装快捷；
  This mechanism is compatible with TOSH-1, TOSH-1P, and TOSH-2 systems, featuring modular design for independent operation and swift assembly；
- 传输介质为防静电齿形带；
  The transmission medium is an anti-static toothed belt；
- 实现托盘的顺/逆时针90°旋转变向，不改变（也可改变）托盘的相对运行方向；
  Enables clockwise/counterclockwise 90° rotation redirection of pallets without altering (or optionally changing) the relative direction of pallet movement；
- 此机构单个托盘+负载总重量≤30KG；
  Maximum total weight per pallet + load capacity for this mechanism is ≤30KG；
- 气动旋转，旋转90°用时≥2s，托盘越大耗时越长；
  Pneumatic rotation with a time requirement of ≥2s for a 90° rotation, larger pallets take longer for rotation；
- 每次只可以通过一个托盘，不可堆积。
  Only one pallet can pass through at a time, no stacking allowed.

尺寸说明：
Dimensional Description

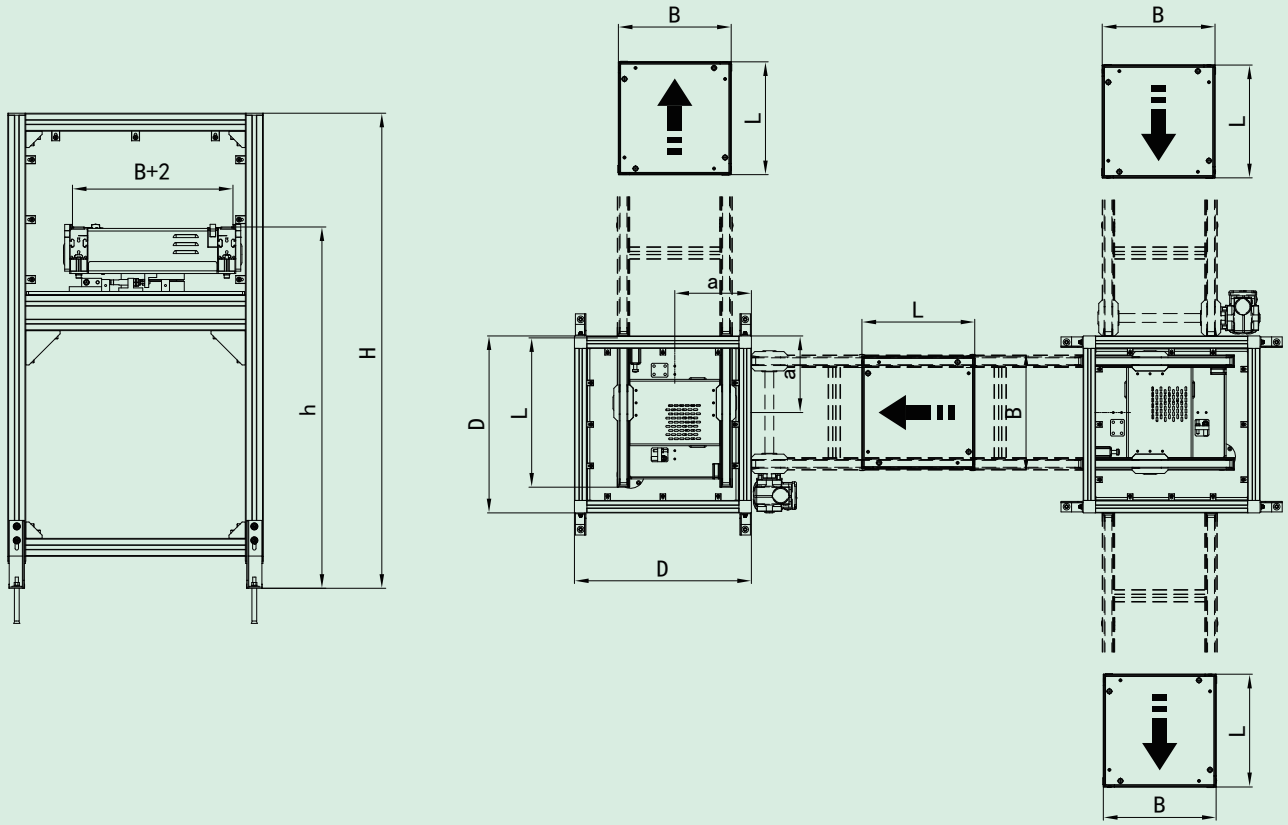

02 托盘输送配套设备
Pallet Conveying Auxiliary Equipment

7.2、TOSH-RT600 600KG 旋转变向输送机构
TOSH-RT600 600KG Rotation Shifting Directional Unit

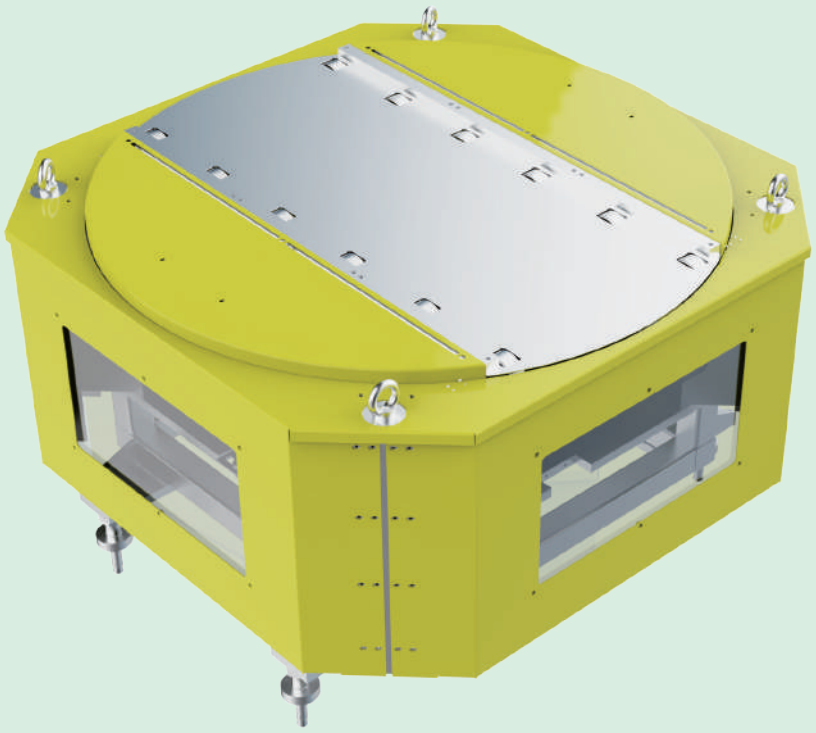

规格参数：
Specifications

型号T Model	托盘宽度B Pallet Width	托盘长度L Pallet Length	线体高度H Conveyor Height	运行速度V Conveyor Speed	对接线体 Interlocking Conveyor Sections
TOSH-RT600	400~1000mm	400~1000mm	按需 As Needed	15m/min	TOSH-5

选型示例：
Example of Selection

①型号 Model		②托盘宽度B Pallet Width		③托盘长度L Pallet Length		④线体高度H Conveyor Height		⑤运行速度V Conveyor Speed		⑥对接线体 Interlocking Conveyor Sections
TOSH-RT600	–	B600	–	L 600	–	H600	–	V9	–	TOSH-5

02 托盘输送配套设备
Pallet Conveying Auxiliary Equipment

产品特点：
Product Features

- 配套TOSH-5使用，模块化设计，可独立运转，组装快捷；
  Compatible with TOSH-5, designed with modularity for independent operation and swift assembly；
- 有气动和电动两种旋转驱动方式；
  Available in both pneumatic and electric rotational drive modes；
- 实现托盘的90度和180度转弯输送，托盘与前进方向的相对位置不发生改变；
  Enables 90-degree and 180-degree turning conveyance for pallets without altering the relative position of the pallet in relation to the forward direction；
- 单个托盘+负载总重量≤2000KG；
  Maximum total weight per pallet + load capacity for this mechanism is ≤2000KG；
- 每次只可以通过一个托盘，不可堆积。
  Only one pallet can pass through at a time, no stacking allowed.

尺寸说明：
Dimensional Description

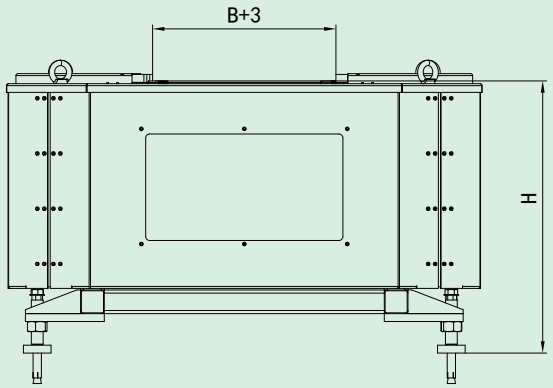

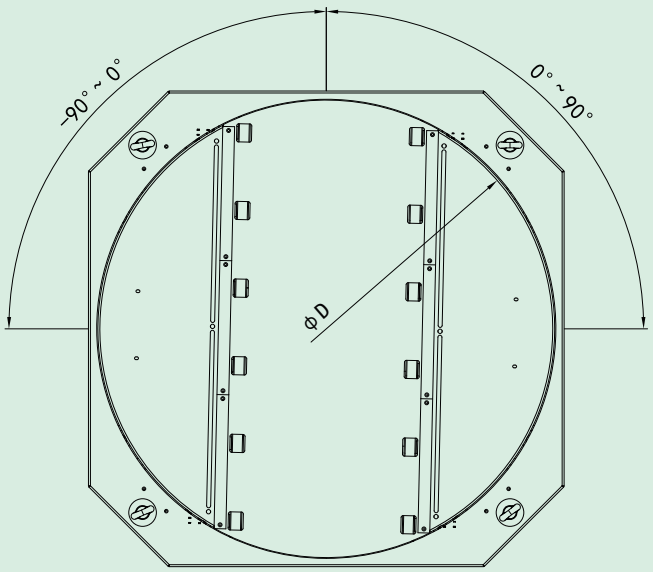

03 托盘
Pallets

托盘是模块化托盘输送系统的组成部分，工件的载体，使静态工件转为动态工件的媒介物，这种以托盘为媒介物进行的输送生产成为“托盘作业”。在生产过程中可以减少转载作业，显著的提高生产效率，减少浪费和工件在作业工程中由于装夹和搬运造成损伤的风险。

Pallets are integral components of modular pallet conveying systems, serving as carriers for goods, transforming static items into dynamic ones. This conveyance method utilizing pallets is known as 'pallet handling.' In the production process, it reduces the need for transfer operations, significantly enhances production efficiency, and minimizes waste. It also reduces the risk of damage to work-pieces during handling and clamping operations in the workflow.

03 托盘
Pallets

TOSH-PA1托盘
TOSH-PA1 Pallet

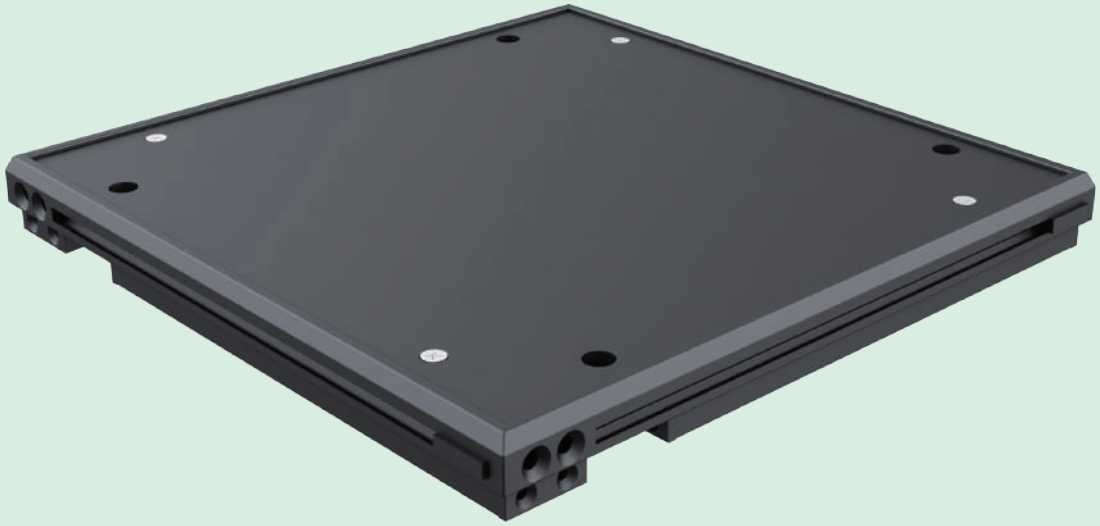

规格参数:
Specifications

型号T Model	托盘宽度B Pallet Width	托盘长度L Pallet Length
TOSH-PA1	见P50~51 Refer to Page P50~51	见P50~51 Refer to Page P50~51

选型示例:
Example of Selection

①型号 Model		②托盘宽度B Pallet Width		③托盘长度L Pallet Length
TOSH-PA1	–	B320	–	L320

03 托盘
Pallets

产品特点：
Product Features

- 使用高强度的铝合金型材及耐磨塑料组合而成，底部耐磨条可更换；
  Constructed with high-strength aluminum alloy profiles and wear-resistant plastic composite, featuring replaceable wear-resistant strips at the bottom；
- 高性能的材料，能够耐受生产中常见的润滑剂、清洗剂等的侵蚀，不保证其他工业气体、液体、溶剂等的侵蚀；
  Made from high-performance materials, capable of withstanding common lubricants and cleaning agents in production, though not guaranteed against corrosion from other industrial gases, liquids, solvents, etc；
- 托盘主板可采用铝板或碳钢板，厚度5mm、8mm、12mm可选；
  The main board of the pallet can be made of aluminum or carbon steel, with thickness options of 5mm, 8mm, or 12mm；
- 适用我司各种类型的传输介质，如皮带、倍速链、辊轮等；
  Compatible with various types of conveying media used within our company, such as belts, speed chains, rollers, etc；
- 自带金属感应片，配合检测使用；
  Equipped with a built-in metal induction piece for detection purposes；
- 定位套用于有精准定位需求的场合，定位精度可达±0.1mm;
  Positioning sleeves are suitable for precise positioning requirements, achieving an accuracy of up to ±0.1mm；
- 可用于对防静电有需求的场合；
  Applicable in environments requiring anti-static properties；
- 除标准规格尺寸外，可根据需求定制，灵活性高。
  Apart from standard specifications, customization is available based on specific requirements, offering high flexibility.

选型计算：
Selection Calculation

如何选配托盘尺寸，除了与输送工件的尺寸有关外，还与托盘总重和输送介质有直接关系，可用以下公式来估算：
When determining the pallet size, it's not only related to the dimensions of the transported goods but also directly linked to the total weight on the pallet and the conveying medium. The following formula can be used for estimation

$$M = L \times F$$

M (kg) :托盘自重+负载重量
Pallet's own weight + load weight

L(cm):与输送介质接触的托盘边长
Length of the pallet in contact with the conveying medium

F (kg/cm):传输介质单位承载能力
Unit load capacity of the conveying medium

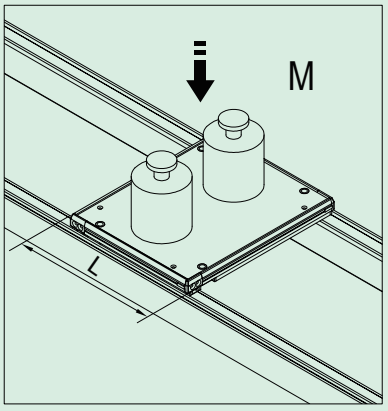

★ 当同一个生产线出现不同的输送介质时，托盘尺寸要保证单位负载能力小的输送介质的安全使用；
(Important) When different conveying media are used on the same production line, the pallet dimensions should ensure the safe use of the conveying medium with the lower unit load capacity.

★ 当同一长方形托盘在输送过程中由于需求，既有短边方向输送又有长边方向输送（有短边接触输送介的情况也有长边接触输送介质的情况），这时要以短边来计算托盘的承载能力。
In the case of a rectangular pallet used for conveying where there are requirements for both short-edge and long-edge directions (i.e., instances where the pallet contacts the conveying medium on the short edge and instances where it contacts the conveying medium on the long edge), the pallet's load-bearing capacity should be calculated based on the short edge.

03 托盘
Pallets

特别说明：
Special Note:

当由于生产需要，带有负载的托盘需要停止或者改变前进方向时，托盘上负载的重心位置对托盘的稳定性有很大的影响，重心的位置会很大程度上影响托盘乃至输送设备的损耗和使用寿命，所以在选配托盘和设计工装时尽量做到：

When a loaded pallet needs to stop or change direction during production, the position of the load's center of gravity significantly affects the stability of the pallet. The location of the center of gravity can greatly impact the wear and tear of the pallet and even the lifespan of the conveying equipment. Therefore, when selecting pallets and designing fixtures, it's advisable to:

1、负载尽量落在托盘的中心位置；

Place the load as close as possible to the center of the pallet；

2、负载重心的高度不得超过托盘宽度B的一半；

Ensure that the height of the load's center of gravity does not exceed half of the pallet's width, B；

3、当不能满足以上两点的情况时，可以选配大一些尺寸的托盘。

When unable to fulfill the first two points, consider choosing a larger-sized pallet.

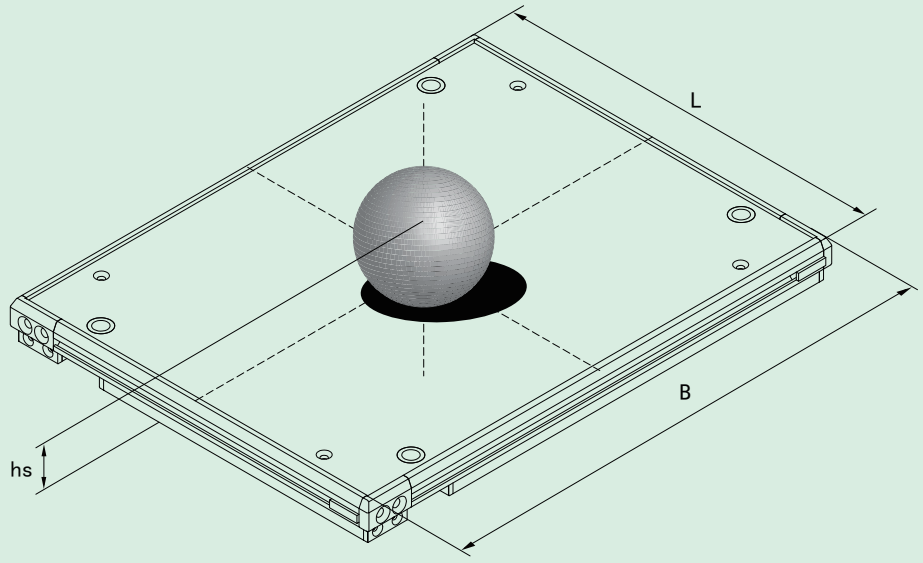

03 托盘
Pallets

尺寸说明:
Dimension Specification

不含定位销套
Excluding Positioning Bushings

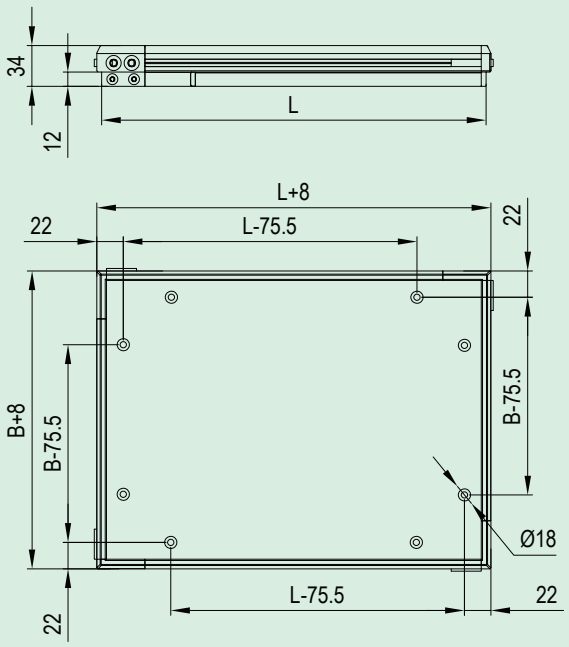

B(mm)	L(mm)	承载托板厚度T(mm) Thickness of Support Plate	平面度P(mm) Flatness	承载托板材质 Material of Support Plate	承载托板表面处理 Surface Treatment of Support Plate	托盘重量(kg) Weight
160	160	5	0.3	铝合金 Aluminum Alloy	本色氧化 Nature Anodized	1.49
	240			铝合金 Aluminum Alloy	本色氧化 Nature Anodized	1.92
	320			铝合金 Aluminum Alloy	本色氧化 Nature Anodized	2.02
240	240	5	0.3	铝合金 Aluminum Alloy	本色氧化 Nature Anodized	2.53
	320		0.5	铝合金 Aluminum Alloy	本色氧化 Nature Anodized	3.23
	400	5	0.6	铝合金 Aluminum Alloy	本色氧化 Nature Anodized	3.84
		8	0.5	铝合金 Aluminum Alloy	本色氧化 Nature Anodized	6.10
	480	5	0.6	铝合金Aluminum Alloy	本色氧化 Nature Anodized	4.46
		8	0.5	铝合金 Aluminum Alloy	本色氧化 Nature Anodized	7.34
320	320	5	0.5	铝合金 Aluminum Alloy	本色氧化 Nature Anodized	3.91
		8	0.5	铝合金 Aluminum Alloy	本色氧化 Nature Anodized	6.26
	400	5	0.6	铝合金 Aluminum Alloy	本色氧化 Nature Anodized	4.61
		8	0.6	铝合金 Aluminum Alloy	本色氧化 Nature Anodized	7.38
	480	5	0.6	铝合金 Aluminum Alloy	本色氧化 Nature Anodized	5.31
		8	0.6	铝合金 Aluminum Alloy	本色氧化 Nature Anodized	8.52
		12	0.6	铝合金 Aluminum Alloy	本色氧化 Nature Anodized	12.84
400	400	5	0.6	铝合金 Aluminum Alloy	本色氧化 Nature Anodized	5.40
		8	0.6	铝合金 Aluminum Alloy	本色氧化 Nature Anodized	8.84
		12	0.6	铝合金 Aluminum Alloy	本色氧化 Nature Anodized	13.32
	480	5	0.6	铝合金 Aluminum Alloy	本色氧化 Nature Anodized	6.19
		8	0.6	铝合金 Aluminum Alloy	本色氧化 Nature Anodized	10.10
		12	0.6	铝合金 Aluminum Alloy	本色氧化 Nature Anodized	15.22
480	480	5	0.8	铝合金 Aluminum Alloy	本色氧化 Nature Anodized	7.06
		8	0.8	铝合金 Aluminum Alloy	本色氧化 Nature Anodized	11.53
		12	0.8	铝合金 Aluminum Alloy	本色氧化 Nature Anodized	17.35
640	640	5	0.8	铝合金 Aluminum Alloy	本色氧化 Nature Anodized	10.83
		8	0.8	铝合金 Aluminum Alloy	本色氧化 Nature Anodized	15.42
		12	0.8	铝合金 Aluminum Alloy	本色氧化 Nature Anodized	23.18

03 托盘
Pallets

尺寸说明:
Dimension Specification

含定位销套
Including Positioning Bushing

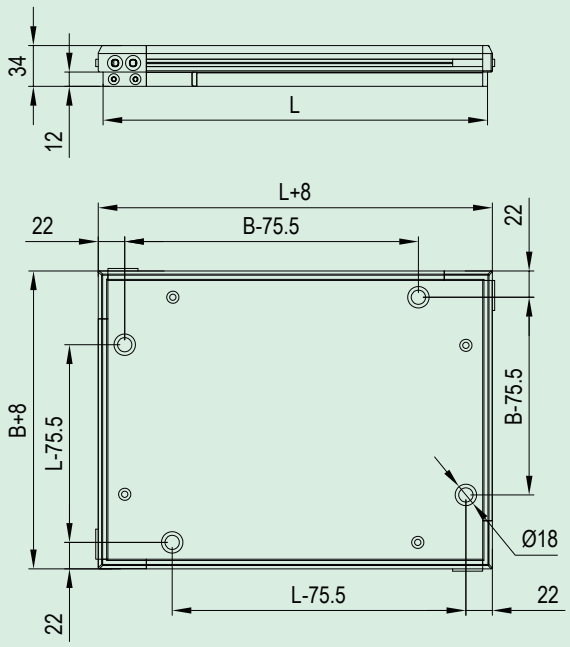

B(mm)	L(mm)	承载托板厚度T(mm) Thickness of Support Plate	平面度P(mm) Flatness	承载托板材质 Material of Support Plate	承载托板表面处理 Surface Treatment of Support Plate	托盘重量(kg) Weight
160	160	5	0.3	铝合金 Aluminum Alloy	本色/黑色氧化 Nature/Black Anodized	1.61
				碳钢 Carbon Steel	黑色电泳 Black Electrophoresis	2.25
	240	5	0.3	铝合金 Aluminum Alloy	本色/黑色氧化 Nature/Black Anodized	2.14
				碳钢 Carbon Steel	黑色电泳 Black Electrophoresis	3.10
	320	5	0.3	铝合金 Aluminum Alloy	本色/黑色氧化 Nature/Black Anodized	2.65
				碳钢 Carbon Steel	黑色电泳 Black Electrophoresis	3.93
240	240	5	0.3	铝合金 Aluminum Alloy	本色/黑色氧化 Nature/Black Anodized	2.75
				碳钢 Carbon Steel	黑色电泳 Black Electrophoresis	4.20
	320	5	0.5	铝合金 Aluminum Alloy	本色/黑色氧化 Nature/Black Anodized	3.35
				碳钢 Carbon Steel	黑色电泳 Black Electrophoresis	5.28
	400	5	0.6	铝合金 Aluminum Alloy	本色/黑色氧化 Nature/Black Anodized	3.96
				碳钢 Carbon Steel	黑色电泳 Black Electrophoresis	6.38
		8	0.5	铝合金 Aluminum Alloy	本色氧化 Nature Anodized	6.22
	480	5	0.6	铝合金 Aluminum Alloy	本色/黑色氧化 Nature/Black Anodized	4.58
				碳钢 Carbon Steel	黑色电泳 Black Electrophoresis	7.48
		8	0.5	铝合金 Aluminum Alloy	本色氧化 Nature Anodized	7.46
320	320	5	0.5	铝合金 Aluminum Alloy	本色/黑色氧化 Nature/Black Anodized	4.03
				碳钢 Carbon Steel	黑色电泳 Black Electrophoresis	6.61
		8	0.5	铝合金 Aluminum Alloy	本色氧化 Nature Anodized	6.38
	400	5	0.6	铝合金 Aluminum Alloy	本色/黑色氧化 Nature/Black Anodized	4.73
				碳钢 Carbon Steel	黑色电泳 Black Electrophoresis	7.96
		8	0.6	铝合金 Aluminum Alloy	本色氧化 Nature Anodized	7.50

04 托盘输送控制元件
Pallet Conveyor Control Components

托盘输送控制元件是组成模块化输送系统的基本单元，用来改变托盘的运行状态，如通过、停止等，与电气和检测系统协同作用，实现生产的自动化、智能化。

Pallet conveying control components are fundamental units comprising modular conveying systems. They are utilized to alter the operational state of pallets, such as enabling passage or stopping, working collaboratively with electrical and detection systems to achieve automation and intelligence in production.

04 托盘输送控制元件
Pallet Conveyor Control Components

1、TOSH-PST-01 气动挡停器
TOSH-PST-01 Pneumatic Stopper

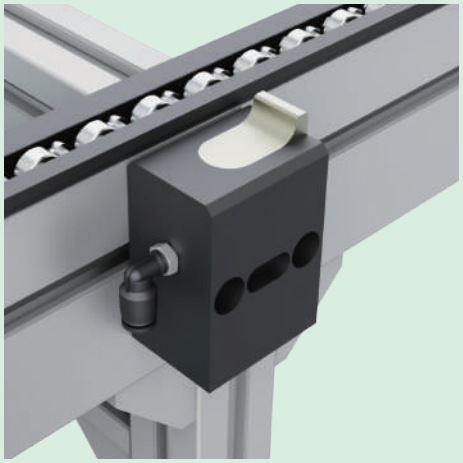

规格参数：
Specifications

型号T Model	挡停负载 Stopper Load	环境温度 Ambient Temperature	压力范围 Pressure Range	自重 Self-Weight
TOSH-PST-01	180KG	0~ 60°C	0.4~0.8Mpa	560g

产品特点：
Product Features:

- 配套TOSH-1、TOSH-1P、TOSH-2使用，独立装置，安装简便；
  Compatible with TOSH-1, TOSH-1P, TOSH-2; stand-alone device, easy installation；
- 外壳为铝合金黑色氧化，止动块为碳钢镀铬；
  Aluminum alloy housing with black anodized; stopper block made of chrome-plated carbon steel；
- 快速接头连接外径φ6的通气软管；
  Quick joint connection for φ6 ventilation hose；
- 阻挡伸缩高度为 9mm；
  Stopper extension height 9mm；
- 可直接安装在输送线体上，不可以反向操作，实现托盘指定位置的停止和通过；
  Can be directly mounted on the conveyor line, non-reversible operation, enabling stopping and passage at specified locations for pallets；
- 可用于防静电场合。
  Suitable for anti-static environments.

尺寸说明：
Dimensional Description

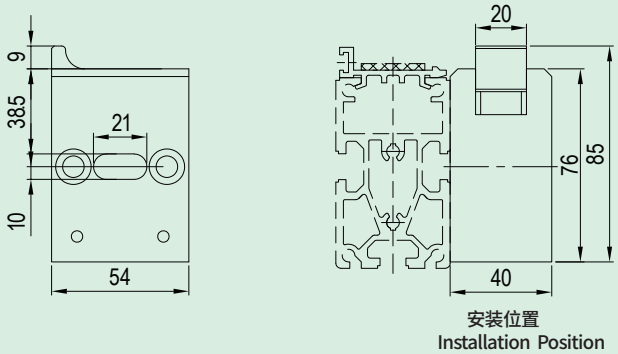

04 托盘输送控制元件
Pallet Conveyor Control Components

挡停能力与速度之间的关系：
Relationship between Stopper Capability and Speed

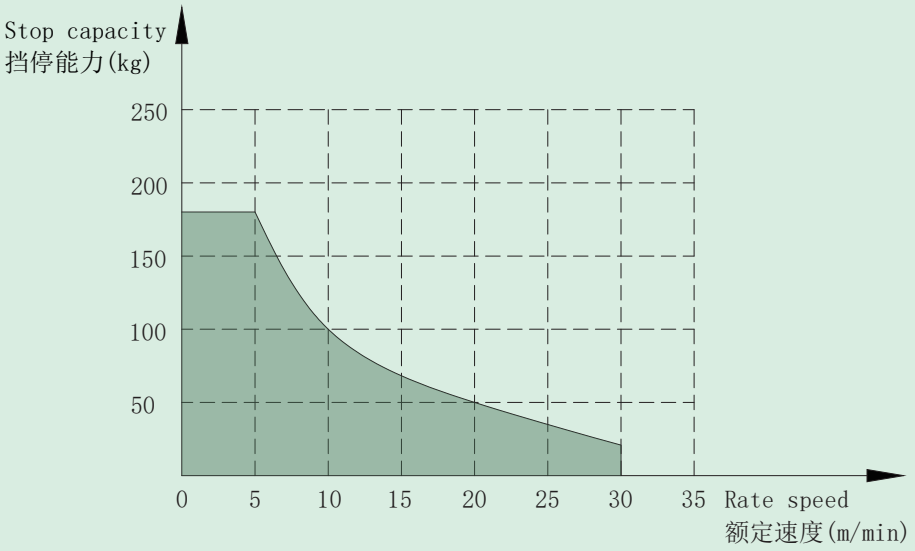

气动原理图：
Pneumatic Schematic Diagram

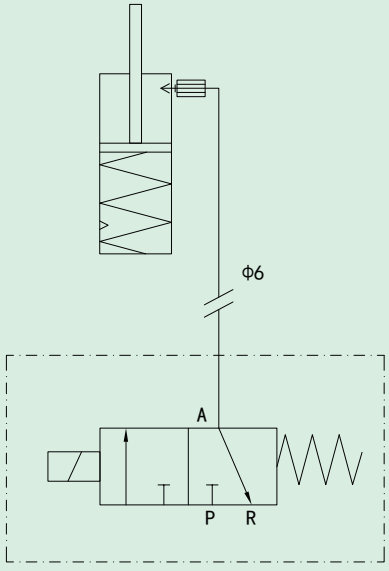

虚线内的部分不包含在供货范围内
The part within the dotted line is not included in the scope of supply

04 托盘输送控制元件
Pallet Conveyor Control Components

2、TOSH-PST-02 气动缓冲挡停器
TOSH-PST-02 Pneumatic Cushioned Stopper

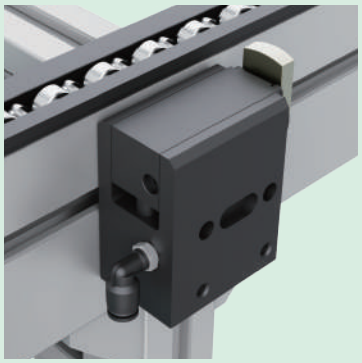

规格参数：
Specifications

型号T Model	挡停负载 Stopper Load	环境温度 Ambient Temperature	压力范围 Pressure Range	自重 Self-Weight
TOSH-PST- 02	1~60KG	0~ 60°C	0.4~0.8Mpa	550g

产品特点：
Product Features:

- 配套TOSH-1、TOSH-1P、TOSH-2使用，独立装置，安装简便；
  Compatible with TOSH-1, TOSH-1P, TOSH-2; stand-alone device, easy installation；
- 外壳为铝合金黑色氧化，止动块为碳钢镀铬；
  Aluminum alloy housing with black oxidation; stopper block made of chrome-plated carbon steel；
- 快速接头连接外径φ6的通气软管；
  Quick joint connection for φ6 ventilation hose；
- 阻挡伸缩高度为9mm，缓冲行程为18.6mm；
  Stopper extension height is 9mm, buffering stroke is 18.6mm；
- 可直接安装在输送线体上，不可以反向操作，实现托盘指定位置的停止和通过；
  Can be directly mounted on the conveyor line, non-reversible operation, enabling stopping and passage at specified locations for pallets；
- 可用于防静电场合。
  Suitable for anti-static environments.

尺寸说明：
Dimensional Description

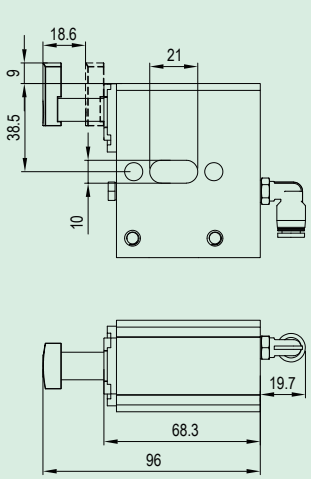

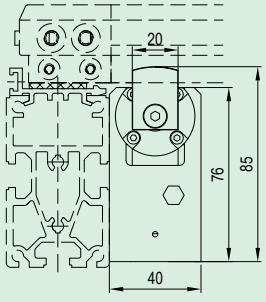

安装位置
Installation Position

04 托盘输送控制元件
Pallet Conveyor Control Components

挡停能力与速度之间的关系：
Relationship between Stopper Capability and Speed

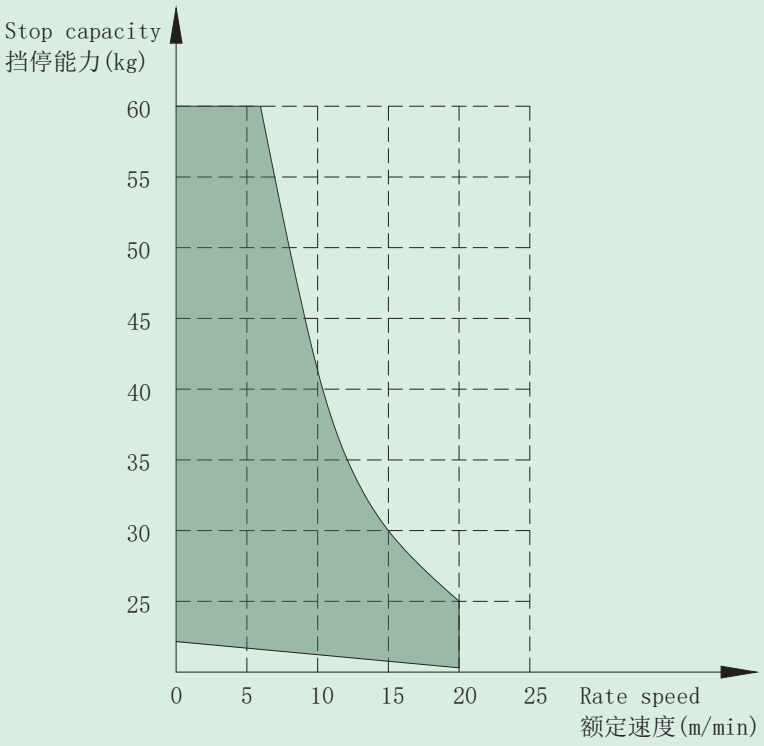

气动原理图：
Pneumatic Schematic Diagram

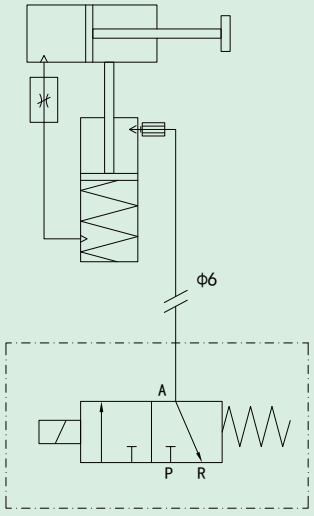

虚线内的部分不包含在供货范围内
The part within the dotted line is not included in the scope of supply

04 托盘输送控制元件
Pallet Conveyor Control Components

3、止回器
TOSH-RST-01 Check Valve

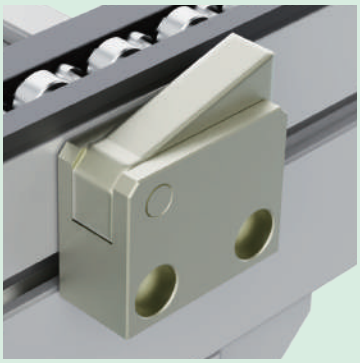

规格参数：
Specifications

型号T Model	挡停负载 Stopper Load	环境温度 Ambient Temperature	自重 Self-Weight
TOSH-RST-01	3~60KG	0~ 60°C	470g

产品特点：
Product Features:

- 配套TOSH-1、TOSH-1P、TOSH-2使用，独立装置，安装简便；
  Compatible with TOSH-1, TOSH-1P, TOSH-2, stand-alone device, easy installation；
- 外壳为碳钢镀镍，止回块为碳钢镀镍；
  Carbon steel housing with nickel plating，check block made of nickel-plated carbon steel；
- 阻挡伸缩高度为9mm；
  Stopper extension height is 9mm；
- 可直接安装在输送线体上，用于无缓冲挡停的情况，由于惯性造成的反弹，防止托盘逆行；
  Can be directly mounted on the conveyor line, used in situations without buffered stopping, preventing pallet rebound due to inertia, thus preventing pallets from moving in reverse；
- 可用于防静电场合。
  Suitable for anti-static environments.

尺寸说明：
Dimensional Description

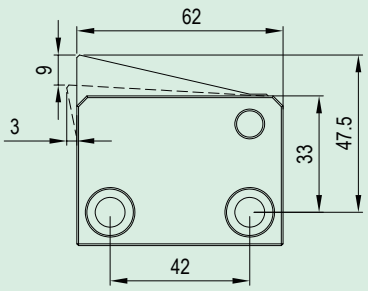

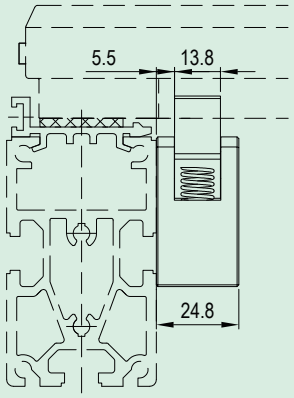

安装位置
Installation Position

04 托盘输送控制元件
Pallet Conveyor Control Components

4、TOSH-DST-01 缓冲挡板
TOSH-DST-01 Buffer Stop

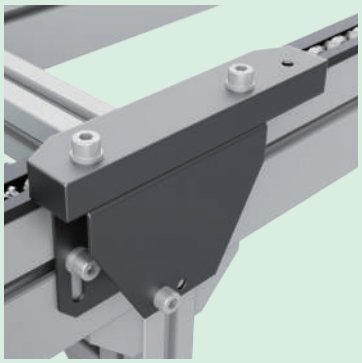

规格参数：
Specifications

型号T Model	挡停负载 Stopper Load	环境温度 Ambient Temperature	自重 Self-Weight
TOSH-DST-01	3~60KG	0~ 60°C	470g

产品特点：
Product Features:

- 配套TOSH-1、TOSH-1P、TOSH-2使用，独立装置，安装简便；
  Compatible with TOSH-1, TOSH-1P, TOSH-2, Stand-alone device, easy installation；
- 下部材质为碳钢喷塑，阻挡块为POM材质；
  Lower part made of carbon steel with powder coating, blocking block made of POM material；
- 可直接安装在线体外侧或末端，起阻挡托盘的作用。
  Can be directly installed on the outer side or end of the conveyor line, serving the purpose of stopping pallets.

尺寸说明：
Dimensional Description

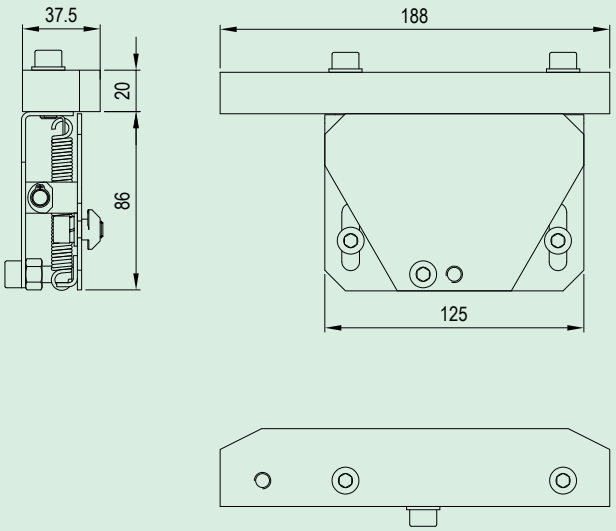

挡停能力与速度之间的关系：
Relationship between Stopper Capability and Speed

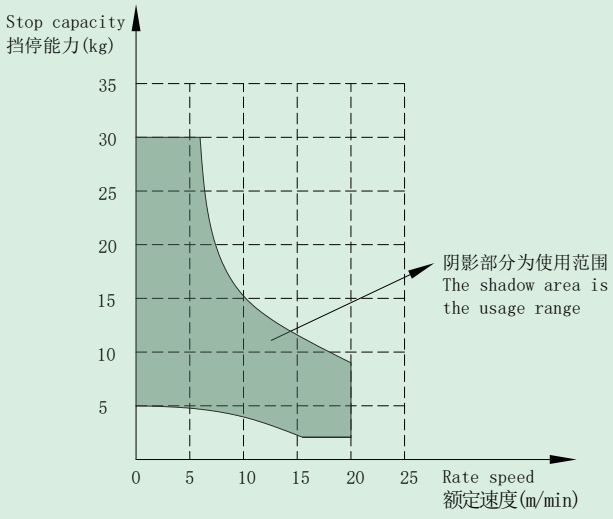

05 皮带输送机
Belt Conveyor

皮带式输送机具有输送量大、结构简单、维修方便、部件标准化等优点，广泛应用于家电、电子、电器、机械、烟草、注塑、邮电、印刷、食品等各行各业，用来输送松散物料或成件物品，根据输送工艺要求，可单台输送，也可多台组成或与其它输送设备组成水平或倾斜的输送系统，以满足不同布置型式的生产线需要。

The belt conveyor, known for its high throughput, simple structure, easy maintenance, and standardized components, boasts various advantages. It finds wide applications across industries such as home appliances, electronics, machinery, tobacco, injection molding, telecommunications, printing, and food. It's utilized for conveying loose materials or assembled items. According to the requirements of the conveying process, it can be used as a stand-alone unit or can be combined with multiple units or other conveying equipment to form horizontal or inclined conveying systems, catering to the diverse layout needs of production lines.

05 皮带输送机
Belt Conveyor

1、TOSH-BE-30E 30系列端部驱动皮带输送机
TOSH-BE-30E 30 Series End -drive Belt Conveyor

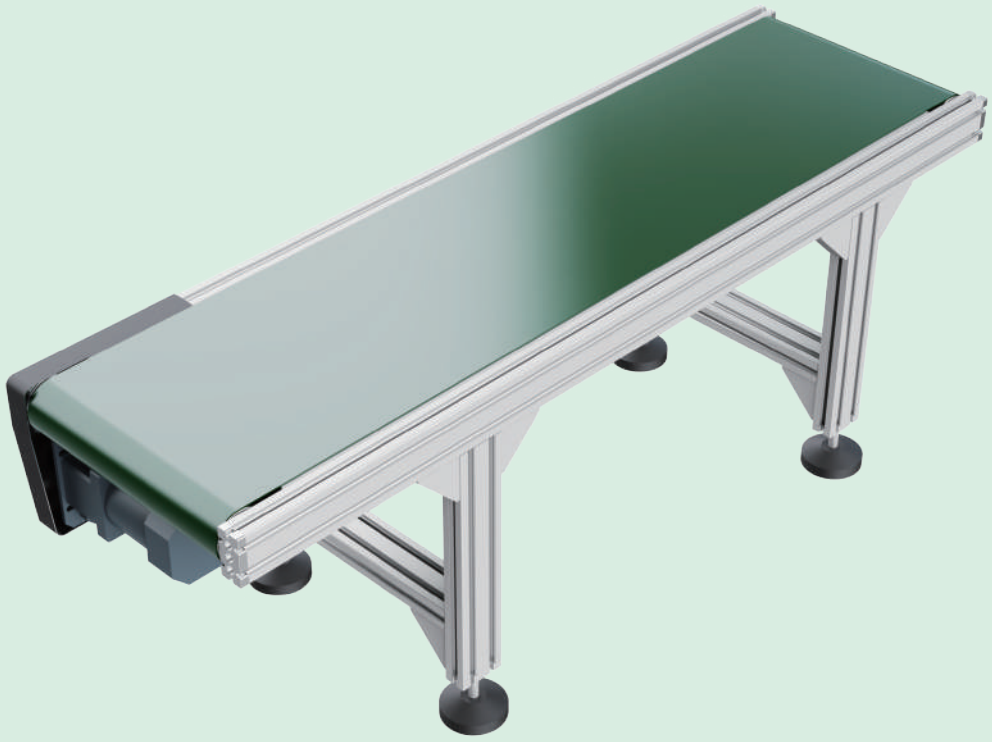

规格参数：
Specifications

型号T Model	线体长度L Conveyor Length	输送面宽度W Conveying Width	线体高度H Conveyor Height	运行速度V Conveyor Speed	速度控制 Speed Control
TOSH-BE-30E	0.6~6m	80~400mm	按需 As Needed	最大40m/min Max 40m/min	定速F/变速V Constant Speed F/ Variable Speed V

选型示例：
Example of Selection

①型号 Model	②线体长度L Conveyor Length	③输送面宽度W Conveying Width	④线体高度H Conveyor Height	⑤运行速度V Conveyor Speed	⑥速度控制 Speed Control
TOSH-BE-30E	– L2300	– W300	– H800	– V15	– F

05 皮带输送机
Belt Conveyor

产品特点：
Product Features

- 主体采用30系列铝型材及配件拼装而成，可随意嫁接其他配套机构，如护栏、传感器等；
  Constructed with 30 series aluminum profiles and components, allowing easy integration with other complementary mechanisms like guardrails, sensors, etc；
- 驱动单元在端部，单向输送，最大负载能力为40KG；
  End-driven unit enabling unidirectional conveying with a maximum load capacity of 40KG；
- 端部涨紧，手动调节，简单方便；
  Manual adjustment for end tensioning, providing simplicity and convenience；
- 实际使用速度建议不超过20m/min，反之会缩短使用寿命；
  Recommended operational speed is below 20m/min for optimal lifespan; exceeding this limit may reduce the product's longevity；
- 护栏有固定护栏和可调节宽度两种，按需选配。
  Guardrails are available in fixed and adjustable widths, selectable as per specific requirements.

尺寸说明：
Dimensional Description

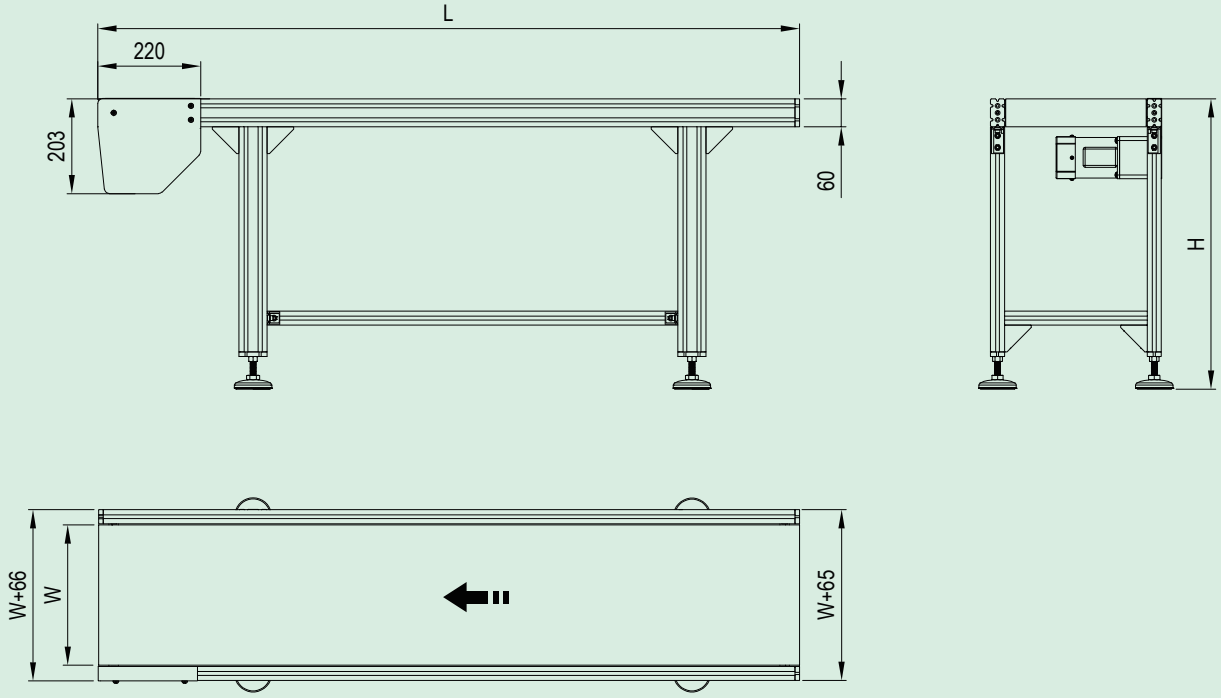

05 皮带输送机
Belt Conveyor

2、TOSH-BE-30M 30系列中间驱动皮带输送机
TOSH-BE-30M 30 Series Center-drive Belt Conveyor



规格参数:
Specifications

型号T Model	线体长度L Conveyor Length	输送面宽度W Conveying Width	线体高度H Conveyor Height	运行速度V Conveyor Speed	速度控制 Speed Control
TOSH-BE-30M	0.6~10m	80~400mm	按需 As Needed	最大40m/min Max 40m/min	定速F/变速V Constant Speed F/ Variable speed V

选型示例:
Example of Selection

①型号 Model	②线体长度L Conveyor Length	③输送面宽度W Conveying Width	④线体高度H Conveyor Height	⑤运行速度V Conveyor Speed	⑥速度控制 Speed Control
TOSH-BE-30M	– L3000	– W280	– H860	– V12	– F

05 皮带输送机
Belt Conveyor

产品特点：
Product Features

- 主体采用30系列铝型材及配件拼装而成，可随意嫁接其他配套机构，如护栏、传感器等；
  30 series aluminum profiles and components, allowing easy integration with other complementary mechanisms like guardrails, sensors, etc；
- 驱动单元位置在线体中间，可双向运行，最大负载能力为50KG；
  Center-driven unit enabling bidirectional conveying with a maximum load capacity of 50KG；
- 端部涨紧，手动调节，简单方便；
  Simple and reliable structure with low maintenance;
- 实际使用速度建议不超过20m/min，反之会缩短使用寿命；
  Recommended operational speed is below 20m/min; exceeding this limit may reduce the product's longevity；
- 护栏有固定护栏和可调节宽度两种，按需选配。
  Available in fixed and adjustable widths, selectable as per specific requirements.

尺寸说明：
Dimensional Description

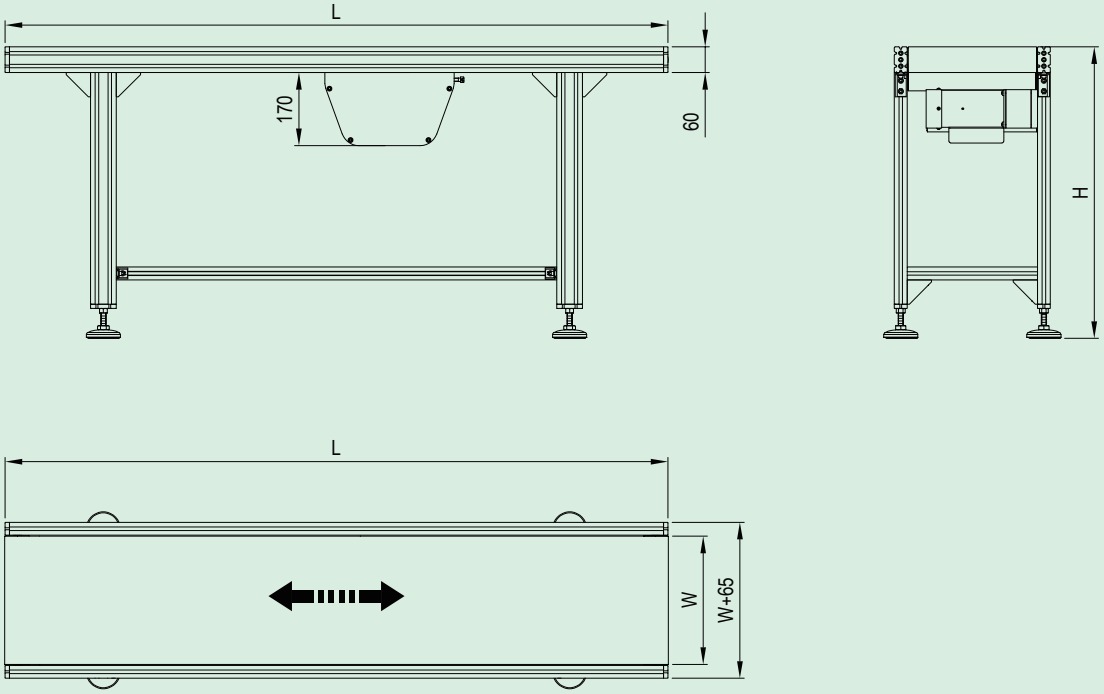

05 皮带输送机
Belt Conveyor

3、TOSH-BE-40E 40系列端部驱动皮带输送机
TOSH-BE-40E 40 Series End Drive Belt Conveyor

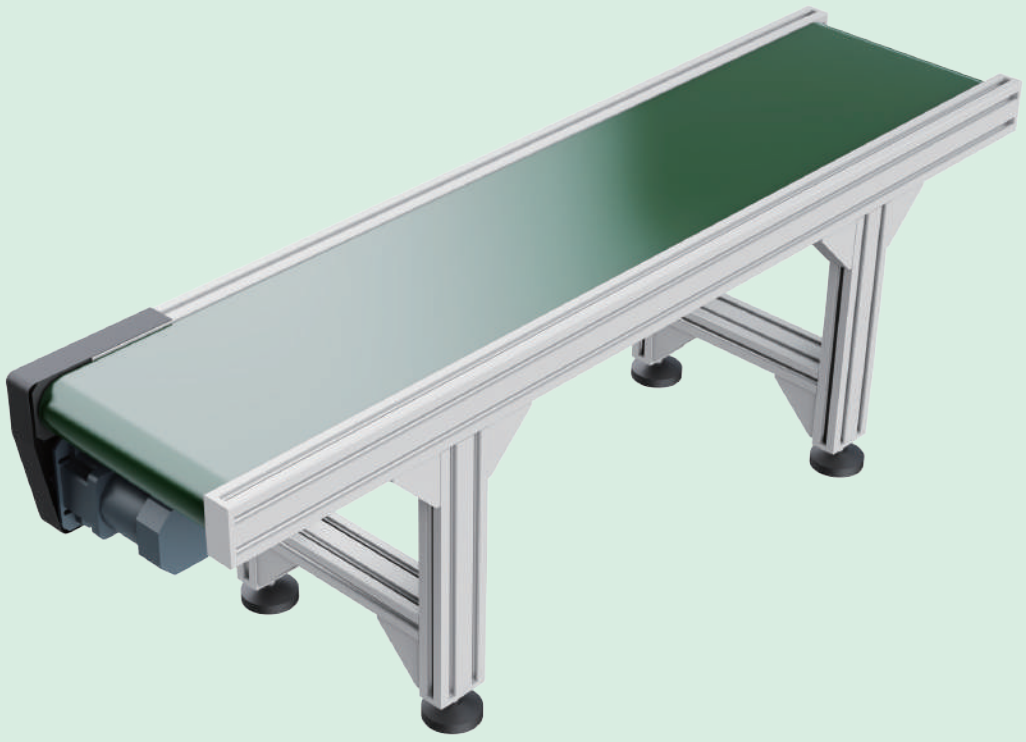

规格参数:
Specifications

型号T Model	线体长度L Conveyor Length	输送面宽度W Conveying Width	线体高度H Conveyor Height	运行速度V Conveyor Speed	速度控制 Speed Control
TOSH-BE-40E	0.6~6m	200~600mm	按需 As Needed	最大40m/min Max 40m/min	定速F/变速V Constant Speed F/ Variable speed V

选型示例:
Example of Selection

①型号 Model		②线体长度L Conveyor Length		③输送面宽度W Conveying Width		④线体高度H Conveyor Height		⑤运行速度V Conveyor Speed		⑥速度控制 Speed Control
TOSH-BE-30E	–	L2300	–	W300	–	H800	–	V15	–	F

05 皮带输送机
Belt Conveyor

产品特点：
Product Features

- 主体采用40系列铝型材及配件拼装而成，可随意嫁接其他配套机构，如护栏、传感器等；
  40 series aluminum profiles and components, allowing easy integration with other complementary mechanisms like guardrails, sensors, etc；
- 驱动单元在端部，单向输送，最大负载能力为50KG；
  End-driven unit enabling unidirectional conveying with a maximum load capacity of 50KG；
- 端部涨紧，手动调节，简单方便；
  Simple and reliable structure with low maintenance;
- 实际使用速度建议不超过20m/min，反之会缩短使用寿命；
  Recommended operational speed is below 20m/min; exceeding this limit may reduce the product's longevity；
- 护栏有固定护栏和可调节宽度两种，按需选配。
  Available in fixed and adjustable widths, selectable as per specific requirements.

尺寸说明：
Dimensional Description

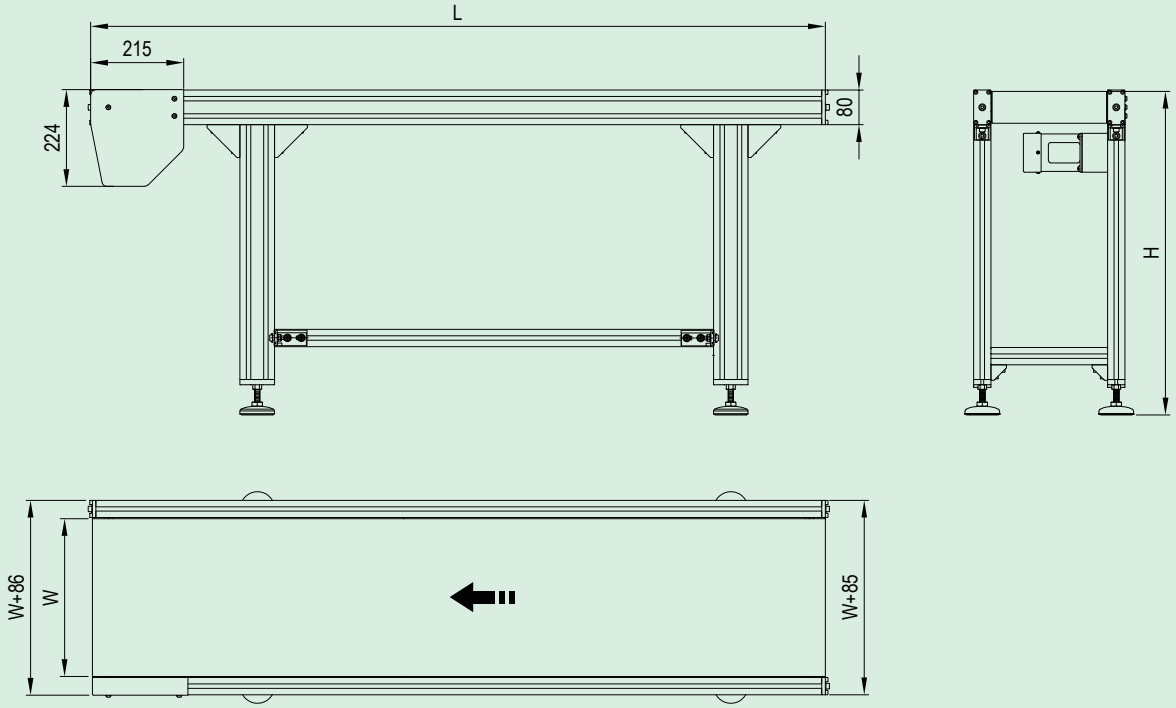

05 皮带输送机
Belt Conveyor

4、TOSH-BE-40M 40系列中间驱动皮带输送机
TOSH-BE-40M 40 Series Center Drive Belt Conveyor



规格参数:
Specifications

型号T Model	线体长度L Conveyor Length	输送面宽度W Conveying Width	线体高度H Conveyor Height	运行速度V Conveyor Speed	速度控制 Speed Control
TOSH-BE-40M	0.6~6m	300~1000mm	按需 As Needed	最大40m/min Max 40m/min	定速F/变速V Constant Speed F/ Variable speed V

选型示例:
Example of Selection

①型号 Model	②线体长度L Conveyor Length	③输送面宽度W Conveying Width	④线体高度H Conveyor Height	⑤运行速度V Conveyor Speed	⑥速度控制 Speed Control
TOSH-BE-40M	– L5600	– W400	– H780	– V7	– F

05 皮带输送机
Belt Conveyor

产品特点：
Product Features

- 主体采用40系列铝型材及配件拼装而成，可随意嫁接其他配套机构，如护栏、传感器等；
  40 series aluminum profiles and components, allowing easy integration with other complementary mechanisms like guardrails, sensors, etc;
- 驱动单元位置在线体中间，可双向运行，最大负载能力为120KG；
  Center-driven unit enabling bidirectional conveying with a maximum load capacity of 120KG;
- 端部涨紧，手动调节，简单方便；
  Simple and reliable structure with low maintenance;
- 实际使用速度建议不超过20m/min，反之会缩短使用寿命；
  Recommended operational speed is below 20m/min; exceeding this limit may reduce the product's longevity;
- 护栏有固定护栏和可调节宽度两种，按需选配。
  Guardrails are available in fixed and adjustable widths, selectable based on specific requirements.

尺寸说明：
Dimensional Description

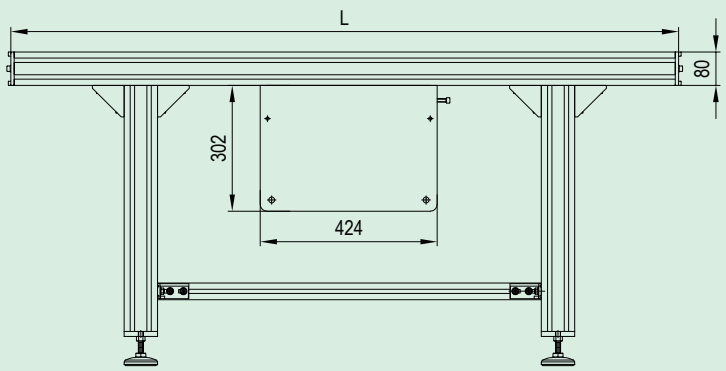

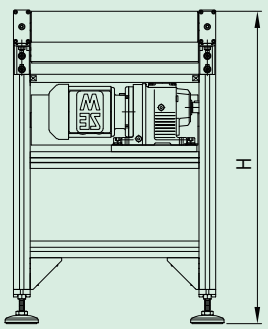

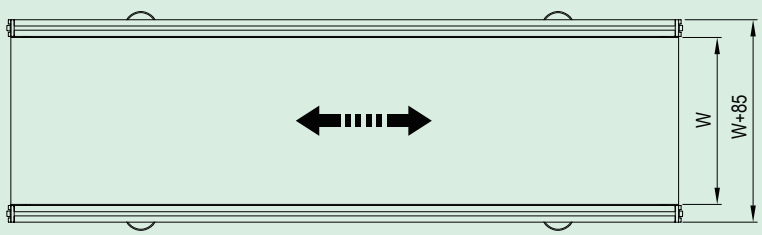

06 辊筒输送机
Roller Conveyor

辊筒输送机 (也称辊道输送机或辊子输送机)，辊筒输送机适用于底部是平面的物品输送，主要由传动滚筒、机架、支架、驱动单元等部分组成。能够承受较大的冲击载荷，具有负载大，速度快，运转轻快，能够实现多品种共线分流输送的特点。辊筒输送机之间易于衔接过滤，可用多条滚筒线及其它输送设备或专机组成复杂的物流输送系统。

The roller conveyor is suitable for conveying items with flat bottoms. It mainly consists of drive rollers, frames, supports, drive units, and other components. It can withstand significant impact loads, featuring high load-bearing capacity, fast speed, smooth operation, and the ability to achieve multi-variety and line diversion. Roller conveyors are easily interconnected, allowing the creation of complex logistics conveying systems using multiple roller lines and other conveying equipment or specialized machinery.

06 辊筒输送机
Roller Conveyor

1、TOSH-RL-F 无动力辊筒输送线
TOSH-RL-F Non-powered Roller Conveyor Line



规格参数：
Specifications

型号T Model	线体长度L Conveyor Length	输送宽度W Conveyor Width	线体高度H Conveyor Height	辊筒间距P Roller Spacing
TOSH-RL-F	L≥600mm	100~1200mm	按需 As Needed	按需 As Needed

选型示例：
Example of Selection

①型号 Model		②线体长度L Conveyor Length		③输送宽度W Conveyor Width		④线体高度H Conveyor Height		⑤辊筒间距P Roller Spacing
TOSH-RL-F	–	L3000	–	W400	–	H650	–	180

06 辊筒输送机
Roller Conveyor

产品特点：
Product Features

- 模块化程度高，结构简单，方便维护；
  Simple and reliable structure with low maintenance;
- 辊筒直径有φ38、φ50.6、φ60、φ76、φ80、φ89 …… 按需选配；
  Roller diameters: φ38, φ50.6, φ60, φ76, φ80, φ89... selectable based on requirements；
- 输送介质为辊筒，辊筒材质有碳钢、不锈钢、塑料等，表面可以进行包胶处理，按需选配；
  Conveys via rollers made of materials such as carbon steel, stainless steel, plastic, etc. Surface options include rubber coating, selectable as needed；
- 线体边框为专用高强度铝型材，标准段对接使用，可以自由安装其他辅助机构（挡板、支架等）；
  The frame of the assembly line is made of specialized high-strength aluminum profiles, designed for standard section docking and allowing flexible installation of other auxiliary components (such as baffles, brackets, etc.)；
- 最大负载可达到1000kg/m,能够承受较大冲击载荷，可以适用不同负载的输送需求；
  Maximum load of up to 1000kg/m, capable of withstanding significant impact loads, catering to various conveying needs；
- 适用于堆积输送。
  Suitable for accumulation conveying.

尺寸说明：
Dimensional Description

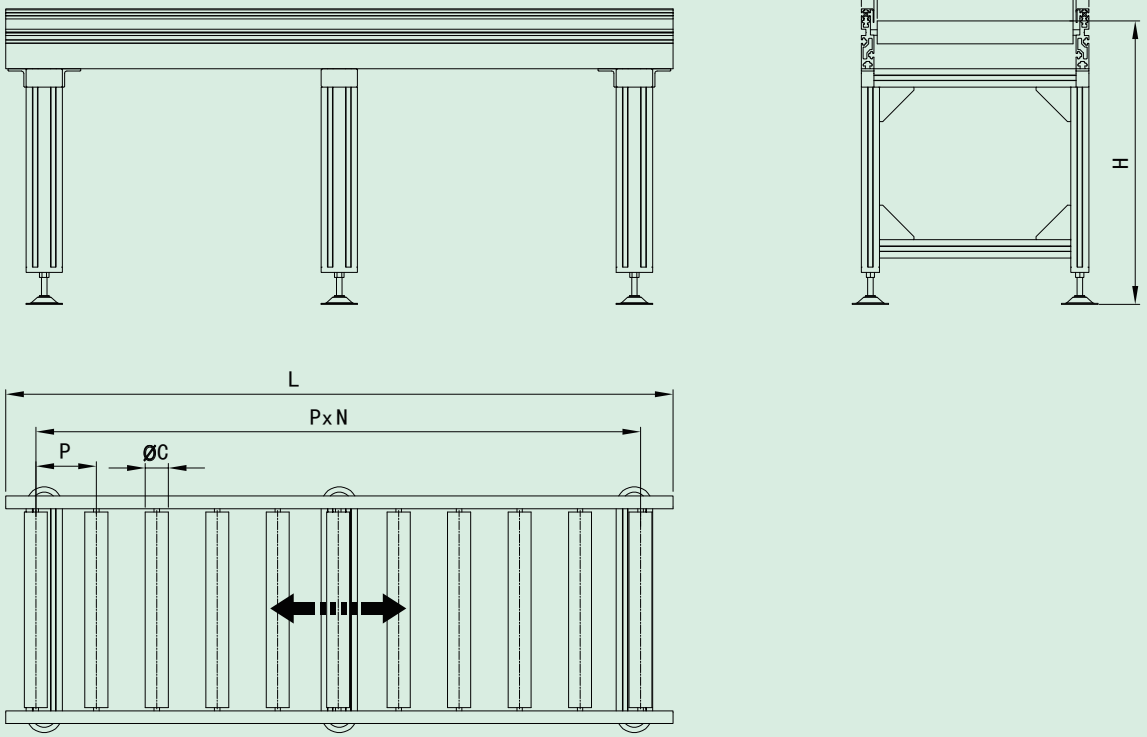

06 辊筒输送机
Roller Conveyor

2、TOSH-RL-P 动力辊筒输送线
TOSH-RL-P Powered Roller Conveyor Line



规格参数：
Specifications

型号T Model	线体长度L Conveyor Length	输送宽度W Conveyor Width	线体高度H Conveyor Height	运行速度V Conveyor Speed	辊筒间距P Roller Spacing
TOSH-RL-P	600~6000mm	120~1200mm	按需 As Needed	最大 20m/min Max 20m/min	选配 Selective

选型示例：
Example of Selection

①型号 Model		②线体长度L Conveyor Length		③输送宽度W Conveyor Width		④线体高度H Conveyor Height		⑤运行速度V Conveyor Speed		⑥辊筒间距P Roller Spacing
TOSH-RL-P	–	L3000	–	W400	–	H650	–	V15	–	P182.56

06 辊筒输送机
Roller Conveyor

产品特点：
Product Features

- 模块化程度高，结构简单，方便维护；
  Simple and reliable structure with low maintenance;
- 辊筒直径有φ38、φ50.6、φ60、φ76、φ80、φ89……按需选配；
  Roller diameters: φ38, φ50.6, φ60, φ76, φ80, φ89... selectable based on requirements；
- 输送介质为辊筒，辊筒材质有碳钢、不锈钢、塑料等，表面可以进行包胶处理，按需选配；
  Conveys mediums are made of materials such as carbon steel, stainless steel, plastic, etc. Surface options include rubber coating, selectable as needed；
- 线体边框为专用高强度铝型材，标准段对接使用，可以自由安装其他辅助机构（挡板、支架等）；
  The frame of the assembly line is made of specialized high-strength aluminum profiles, designed for standard section docking and allowing flexible installation of other auxiliary components (such as baffles, brackets, etc.)；
- 最大负载可达到250kg/m,能够承受较大冲击载荷，可以适用不同负载的输送需求；
  Maximum load of up to 250kg/m, capable of withstanding significant impact loads, catering to various conveying needs；
- 有积放功能，且积放力可调，适用于堆积输送。
  Adjustable stacking force, suitable for accumulation conveying.

尺寸说明：
Dimensional Description

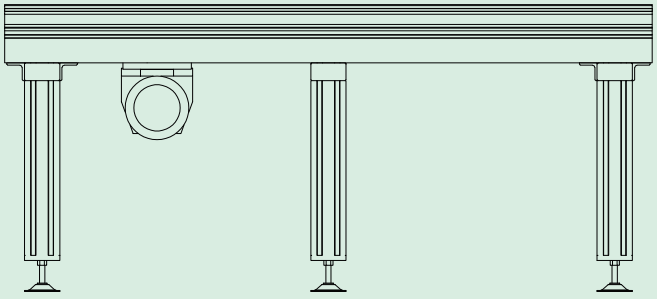

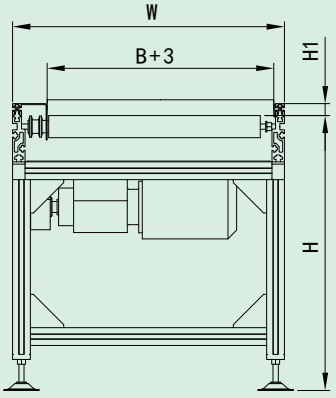

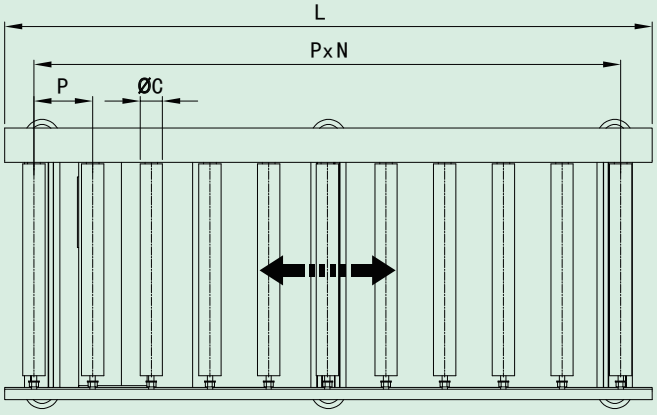

07 链带式输送机
Chain Conveyor

链带式输送机是以标准链板为输送介质，利用链板面为承载面的动力传输装置，具有灵巧、轻便、美观的特点。标准化的结构，模块化设计，安装快速，随意、系统稳定、紧凑、安静、无污染，广泛用于卫生要求高,场地范围小,洁净,自动化程度高的生产线配套使用.具有转弯半径小,爬坡强等优点，此系统可大可小，可组成集料、分流、分检、合流各种功能，加装各种气动、电动、机动自控装置，并根据用户不同的需要，形成各种形式的生产流水线.

The chain conveyor utilizes standard chain plates as its conveying medium, employing a powered transmission device with the chain plate surface as the load-bearing surface. It features agility, lightweight construction, and an aesthetic appeal. With standardized structures and modular design, it offers rapid and flexible installation, ensuring system stability, compactness, quiet operation, and minimal pollution. Widely used in production lines that demand high sanitation, have limited space, require cleanliness, and boast high levels of automation. It excels in small turning radius, strong incline capabilities, and can be adapted for various functions like aggregation, diversion, inspection, and merging. The system can incorporate various pneumatic, electric, and automatic control devices. Depending on users' needs, it can be configured into diverse forms of production lines."

07 链带式输送机
Chain Conveyor

1、TOSH-FC 柔性链输送机
TOSH-FC Flexible Chain Conveyor

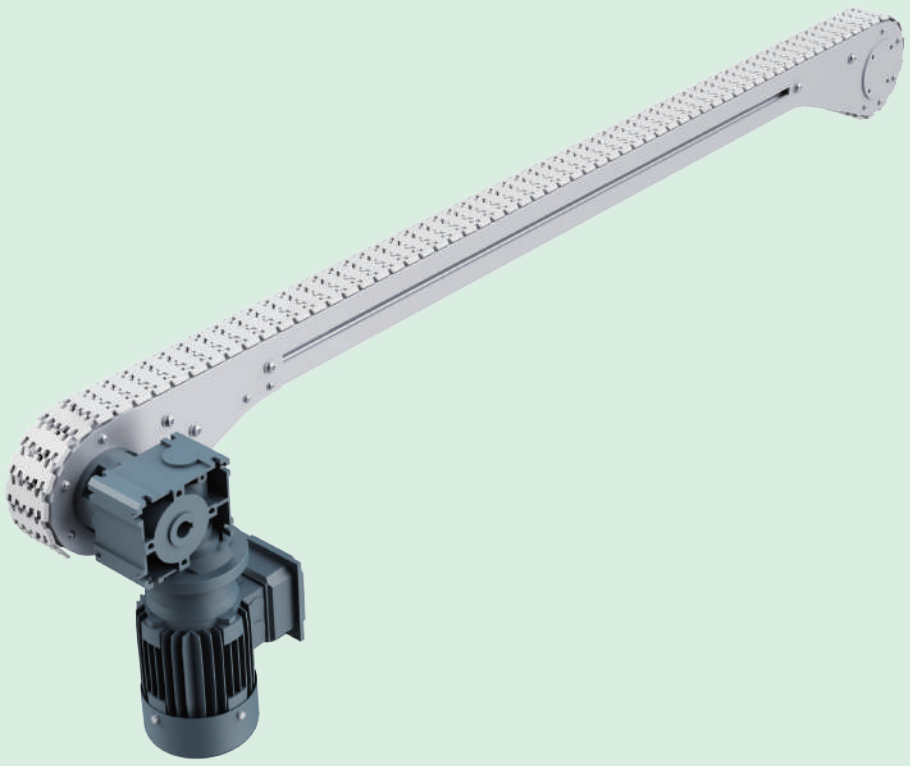

规格参数：
Specifications

型号T Model	线体长度L Conveyor Length	输送宽度W Conveyor Width	线体高度H Conveyor Height	运行速度 V Conveyor Speed
TOSH-FC	800~20000mm	44/63/83/103mm	按需 As Needed	最大 20m/min Max 20m/min

选型示例：
Example of Selection

①型号 Model		②线体长度L Conveyor Length		③输送宽度W Conveyor Width		④线体高度H Conveyor Height		⑤运行速度V Conveyor Speed
TOSH-FC	–	L3000	–	W63	–	H900	–	V12

07 链带式输送机
Chain Conveyor

产品特点：
Product Features

- 模块化程度高，结构简单，方便维护；
  Simple and reliable structure with low maintenance;
- 输送介质为柔性链板，链板材质为工程塑料POM，摩擦力小，输送平稳；
  Conveys mediums are made of POM,surface options include rubber coating, selectable as needed. ensuring smooth transportation with low friction；
- 链板宽度有44/63/83/103等宽度供选择，单向运行，不可以反转；
  Available chain plate widths include 44/63/83/103, operating in one direction without the ability to reverse；
- 线体边框为专用高强度铝型材，可以自由安装其他辅助机构（护栏、支架、传感器等）；
  The frame of the assembly line is made of specialized high-strength aluminum profiles, designed for standard section docking and allowing flexible installation of other auxiliary components (such as baffles, brackets, etc.)；
- 整机最大负载可达到120kg，适用于医药、食品、化妆品等行业；
  Maximum load capacity of reaches 120kg, suitable for industries such as pharmaceuticals, food, cosmetics, etc；
- 线体布局灵活，结构紧凑转弯半径小，可以实现转弯、爬坡的空间布局。
  Flexible line layout, compact structure, small turning radius, enabling spatial layouts for turns and inclines.

尺寸说明：
Dimensional Description

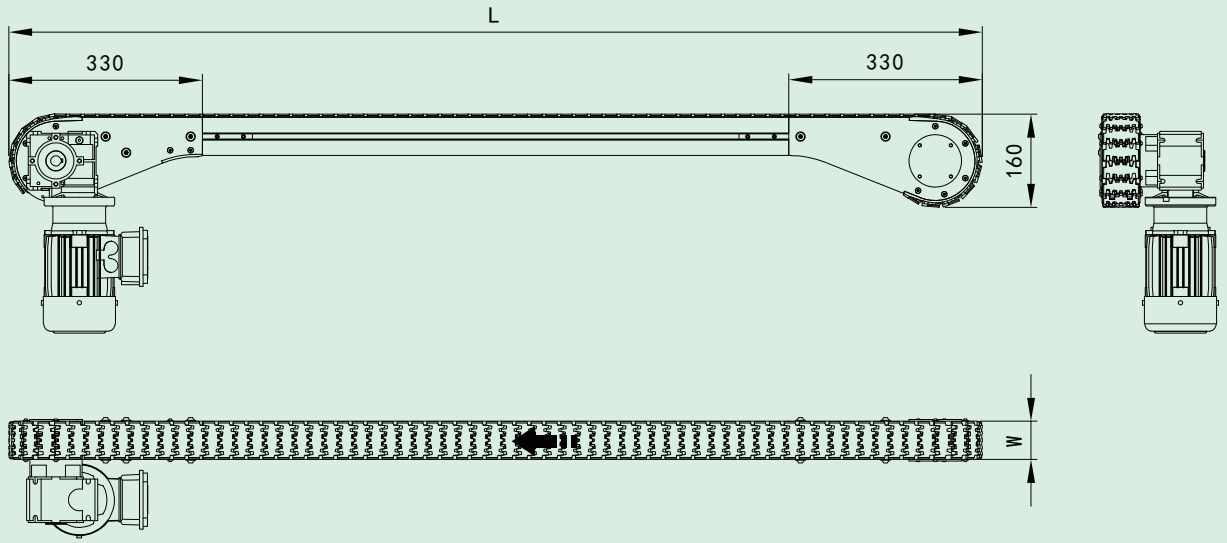

07 链带式输送机
Chain Conveyor

2、TOSH-TC 顶板链输送线
TOSH-TC Overhead Chain Conveyor Line

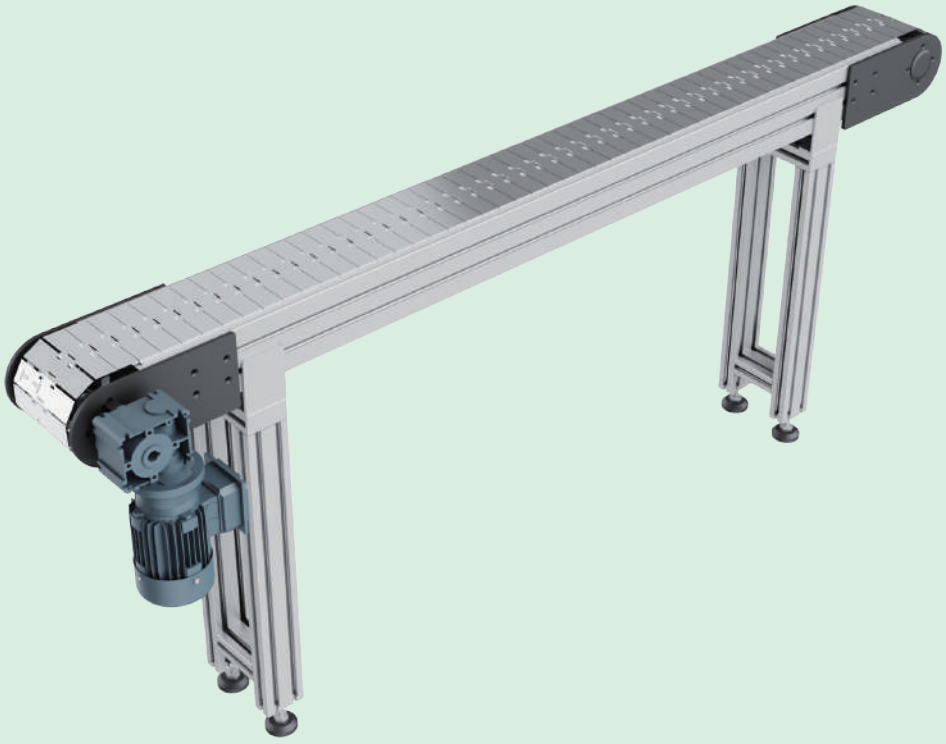

规格参数：
Specifications

型号T Model	线体长度L Conveyor Length	输送宽度W Conveyor Width	线体高度H Conveyor Height	运行速度 V Conveyor Speed
TOSH-TC	1000~20000mm	82.6/114.3/152.4/190.5/254/304.8mm	按需 As Needed	最大 20m/min Max 20m/min

选型示例：
Example of Selection

①型号 Model		②线体长度L Conveyor Length		③输送宽度W Conveyor Width		④线体高度H Conveyor Height		⑤运行速度V Conveyor Speed
TOSH-TC	–	L4200	–	W114.3	–	H800	–	V9

07 链带式输送机
Chain Conveyor

产品特点：
Product Features

- 模块化程度高，结构简单，方便维护；
  Simple and reliable structure with low maintenance;
- 输送介质为顶板链，链板材质为工程塑料POM、不锈钢，摩擦力小，输送平稳；
  Conveys mediums are made of POM,stainless steel, selectable as needed. ensuring smooth transportation with low friction；
- 链板宽度有82.6/114.3/152.4/190.5/254/304.8等宽度供选择，单向运行，不可以反转；
  Available chain plate widths include 82.6/114.3/152.4/190.5/254/304.8,operating in one direction without the ability to reverse；
- 线体边框为专用高强度铝型材，可以自由安装其他辅助机构（护栏、支架、传感器等）；
  The frame of the assembly line is made of specialized high-strength aluminum profiles, designed for standard section docking and allowing flexible installation of other auxiliary components (such as baffles, brackets, etc.)；
- 整机最大负载可达到300kg，适用于铸造、加工制造、食品、饮料等行业。
  Maximum load capacity of reaches 300kg, suitable for industries like casting, manufacturing, food, beverages, etc.

尺寸说明：
Dimensional Description

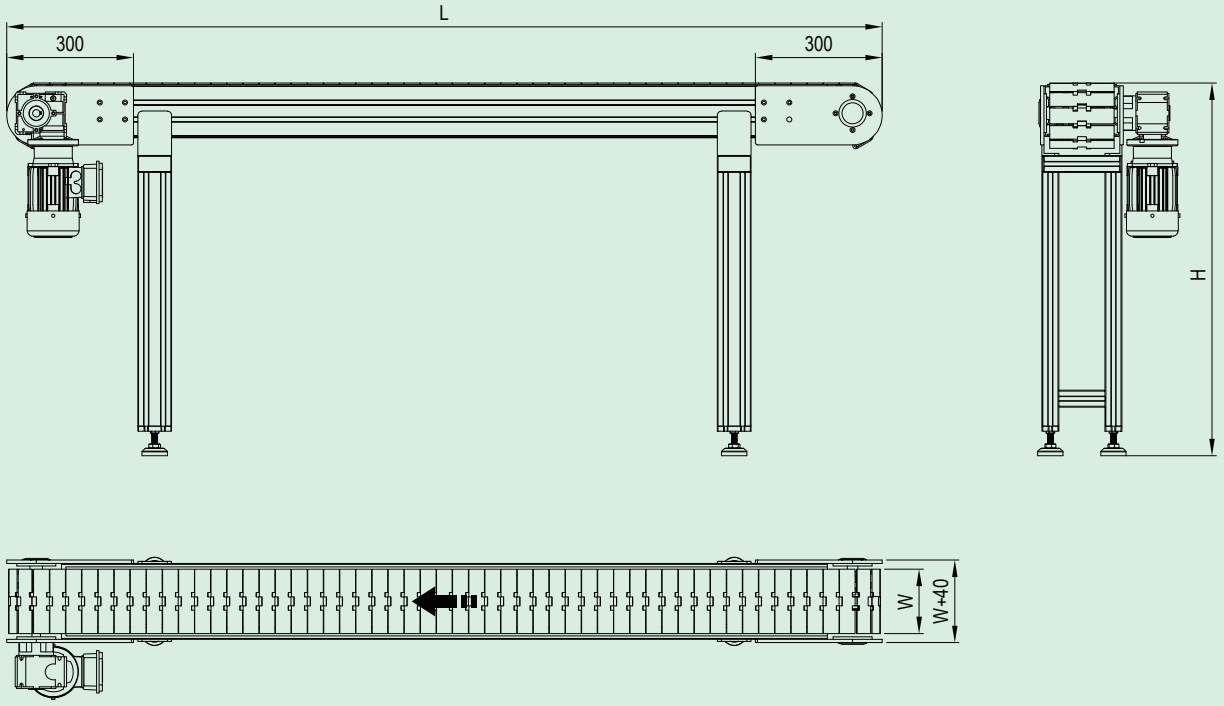

07 链带式输送机
Chain Conveyor

3、TOSH-CB 网链输送机
TOSH-CB Mesh Chain Conveyor

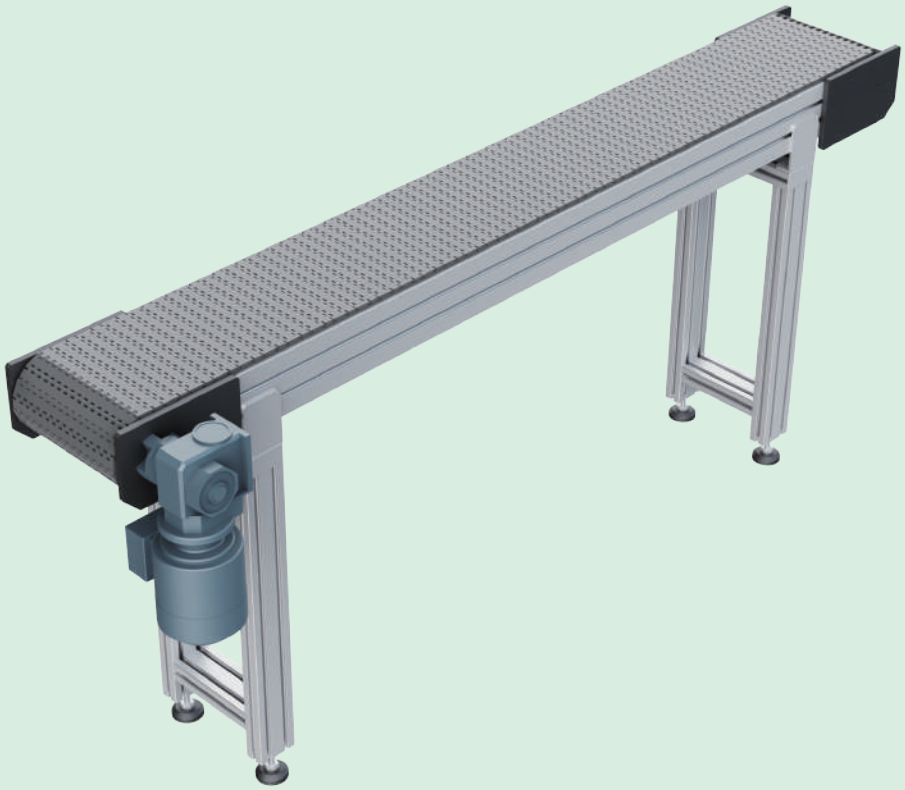

规格参数：
Specifications

型号T Model	线体长度L Conveyor Length	输送宽度W Conveyor Width	线体高度H Conveyor Height	运行速度 V Conveyor Speed
TOSH-CB	800~10000mm	150~1000mm	按需 As Needed	最大 20m/min Max 20m/min

选型示例：
Example of Selection

①型号 Model		②线体长度L Conveyor Length		③输送宽度W Conveyor Width		④线体高度H Conveyor Height		⑤运行速度V Conveyor Speed
TOSH-CB	–	L3800	–	W457.2	–	H800	–	V13

07 链带式输送机
Chain Conveyor

产品特点：
Product Features

- 模块化程度高，结构简单，方便维护；
  Simple and reliable structure with low maintenance;
- 输送介质为网带链，网链材质为工程塑料POM、PP、PE，耐水耐油耐某些腐蚀，摩擦力小，输送平稳；
  Conveys medium utilizing engineering plastic materials like POM, PP, PE; water-resistant, oil-resistant, and resistant to certain corrosive substances, smooth transportation with low friction；
- 线体宽度可根据标准网链节距成倍数增加，单向运行，不可以反转；
  The conveyor width can increase in multiples based on standard chain intervals, operating in one direction without the ability to reverse；
- 线体边框为专用高强度铝型材，可以自由安装其他辅助机构（护栏、支架、传感器等）；
  The frame of the assembly line is made of specialized high-strength aluminum profiles, designed for standard section docking and allowing flexible installation of other auxiliary components (such as baffles, brackets, etc.)；
- 整机最大负载可达到600kg，适用于医药、包装、食品、饮料等行业。
  Maximum load capacity of the entire unit reaches 600kg, suitable for industries such as pharmaceuticals, packaging, food, beverages, etc.

尺寸说明：
Dimensional Description

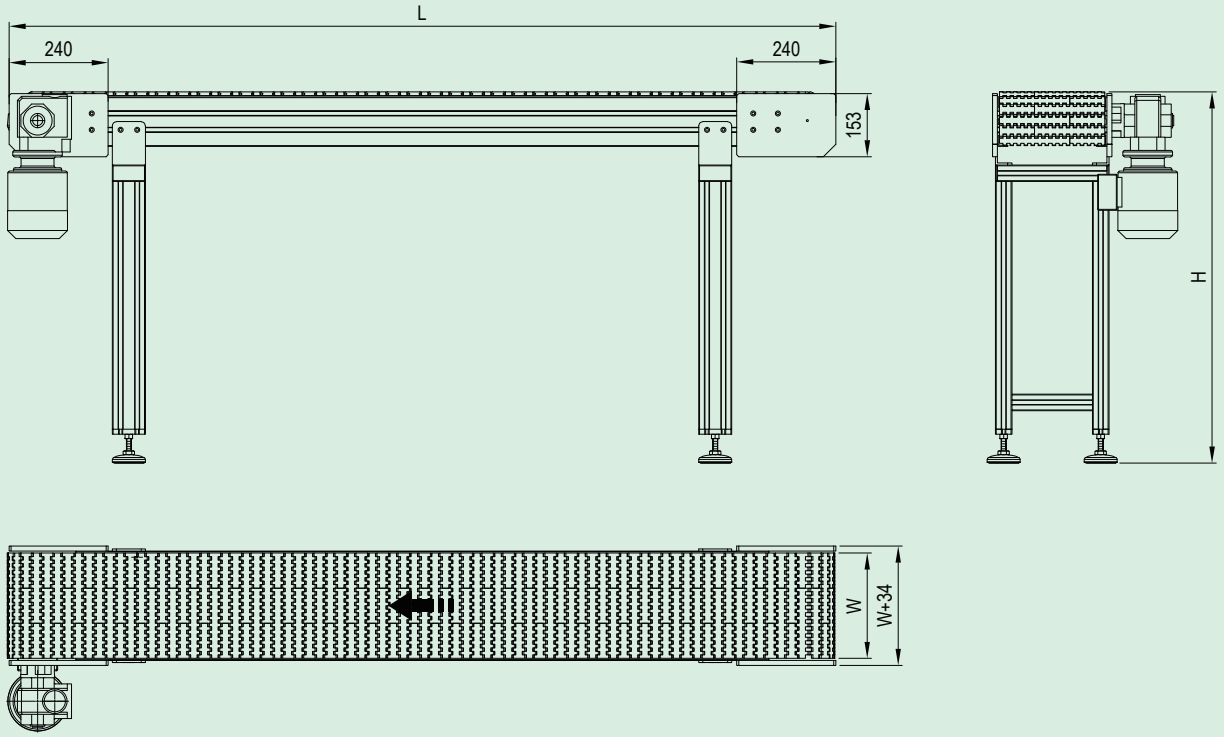

我司业务遍布全球很多国家，欢迎您的莅临和支持。
Our company's business covers many countries worldwide, and we welcome your visit and support.



知识产权：
Intellectual Property

多信网站
Toshine Website
通过多信网站可以多方位了解我司的企业信息
Through Toshine website, you can gain a comprehensive understanding of our company's corporate information.



产品样册
Product Catalog
通过我司各系列的产品样册，更详细的了解产品信息，专业的团队提供全面的技术支持，量身打造适合您的产品。
Through our various series of product catalog, you can gain a more detailed understanding of product information. Our professional team provides comprehensive technical support and tailors products to suit your needs.



我司保留知识产权内容的修改权利；
Our company reserves the right to modify the content of intellectual property;
我司保留进行技术改造和修改错误的权利；
Our company reserves the right to carry out technical transformations and correct errors;
我司保留所有权，使用任何类型的文字或插图都需经过我司书面同意，特别是电子版的复制、翻译或使用。
Our company reserves all rights. The use of any type of text or illustration requires our written consent, especially the reproduction, translation, or use of electronic versions.

TOSHINE

沈阳多信铝业有限公司
Shenyang Toshine Aluminum Co., Ltd

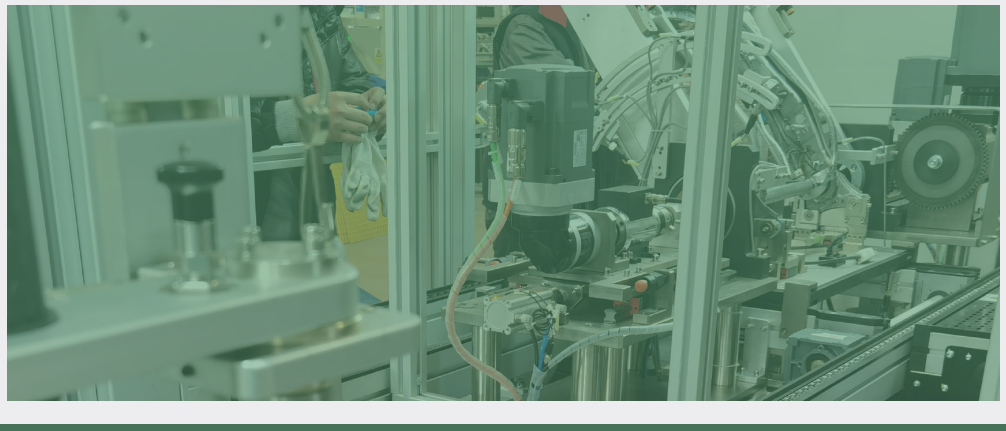

电话Tel： 86-024-25695788

邮箱E-mail：toshinelaurie@gmail.com

公司地址：沈阳市皇姑区岐山东路乐天圣苑1号楼0412室

Company Add：RM 0412, Building 1, Lotte Castle, Qishan Road, Huanggu District, Shenyang City, China, PC110032

网址Web：https://www.sytoshine.cn

Facebook：https://www.facebook.com/laurie.wong.7739814

Twitter：https://twitter.com/Toshine65873041

Youtube：https://www.youtube.com/channel/UC1FTGQZEhAZIZvucrGvEldQ